US Army Corps
of Engineers
New England District

OTTER BROOK LAKE
MODIFY SPILLWAY

KEENE,
NEW HAMPSHIRE

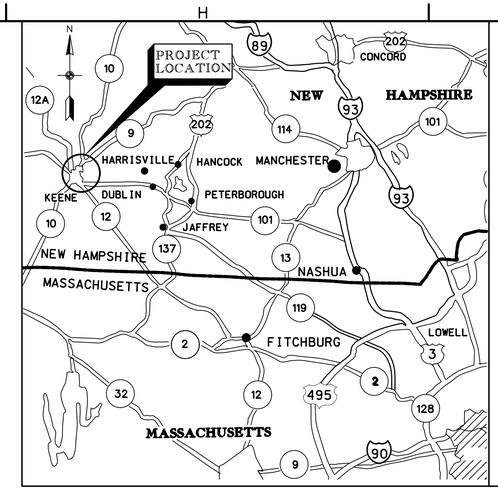

LOCATION MAP
N.T.S.

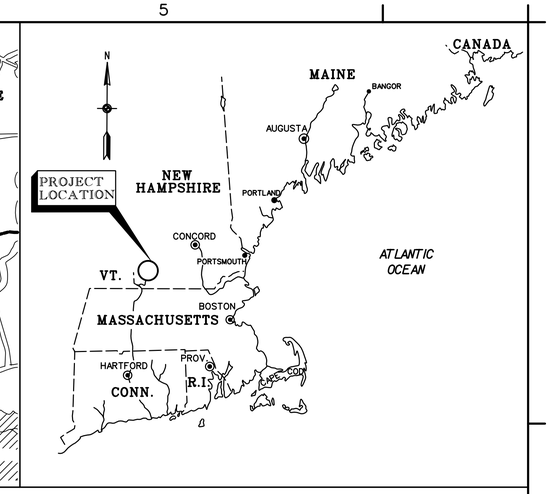

VICINITY MAP
N.T.S.

SEE SPECIFICATIONS FOR DRAWING SIGNATURES

APPROVED FUNCTIONAL ADEQUACY
JENNIFER FLANAGAN /s/
TECHNICAL LEAD ENGINEER DATE:
REVIEWED BY:
DAVID R. DESCOTEAUX /s/
CHIEF, DESIGN BRANCH DATE:
REVIEWED BY:
CH., HTRW/GEOTECH ENGRG BR DATE:

RECOMMENDED BY:
DEPUTY CHIEF, E/P DIV DATE:
APPROVED BY:
DAVID L. DULONG, P.E. /s/
CHIEF, ENGRG/PLANNING DIV DATE:

U.S. ARMY ENGINEER DISTRICT
CORPS OF ENGINEERS
CONCORD, MASSACHUSETTS

THIS PROJECT WAS DESIGNED BY THE NEW ENGLAND DISTRICT OF THE U.S. ARMY CORPS OF ENGINEERS. THE VALUE OF SERVICES PROVIDED BY CONTRACTORS DESIGNATIONS OF INDIVIDUALS APPEAR ON THESE PROJECT DOCUMENTS, WITHIN THE SCOPE OF THEIR EMPLOYMENT AS REQUIRED BY ER 1110-1-8152.

WATER RESOURCES DEVELOPMENT PROJECT
OTTER BROOK LAKE
KEENE, NEW HAMPSHIRE
MODIFY SPILLWAY

COVER SHEET

Reference number:
G-1
Sheet 1 of 10

VALUE ENGINEERING PAYS DIVIDENDS

SAFETY PAYS

SOLICITATION # W912WJ-05-B-0005

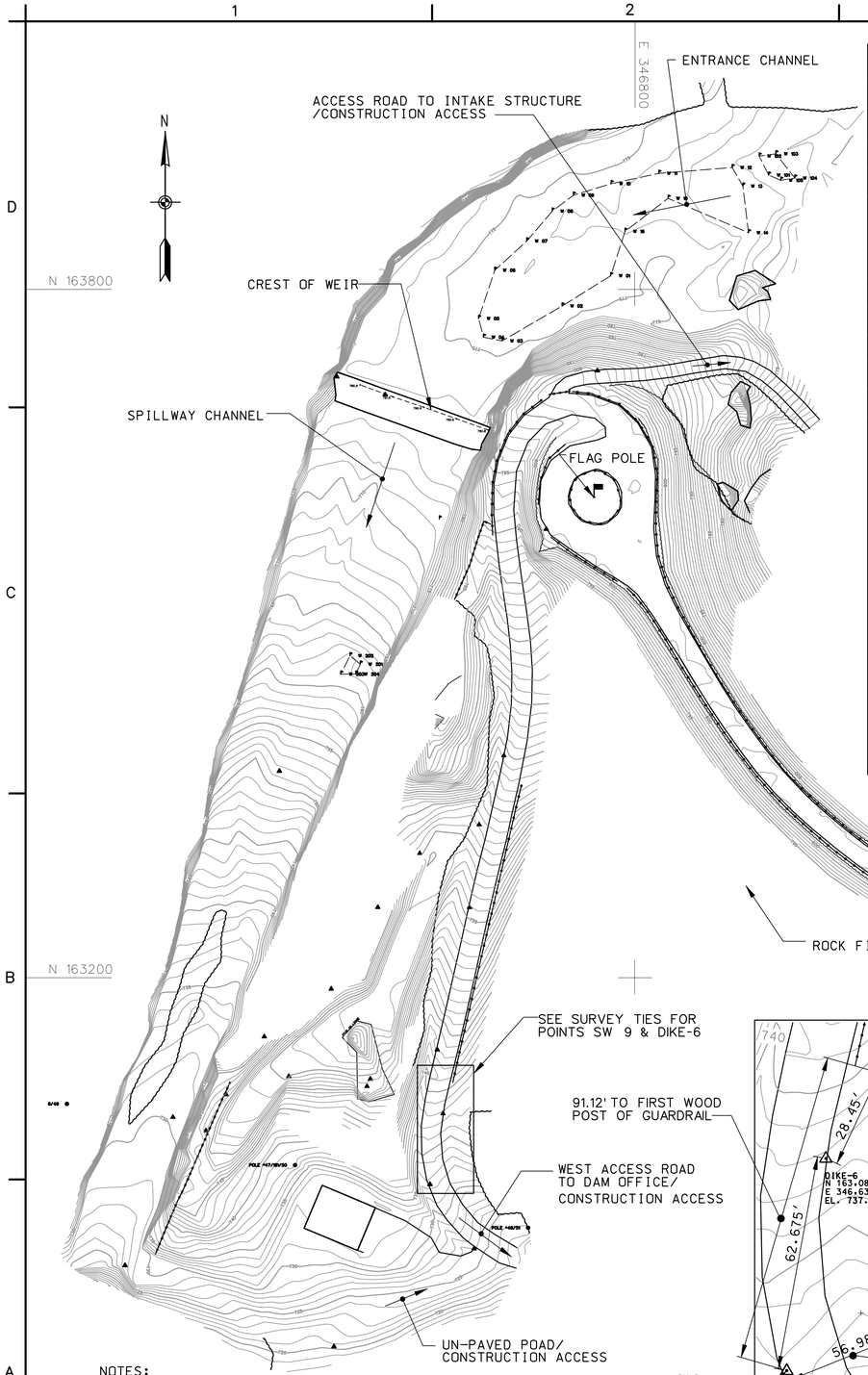

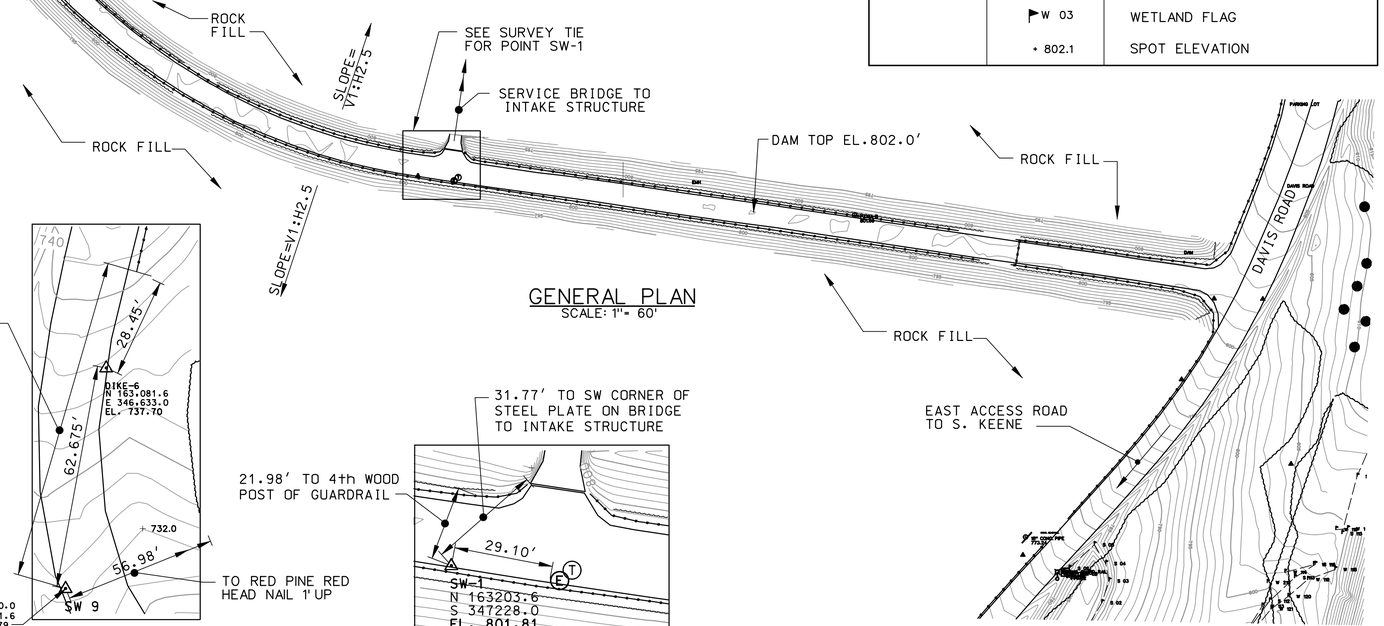

GENERAL PLAN
SCALE: 1"= 60'

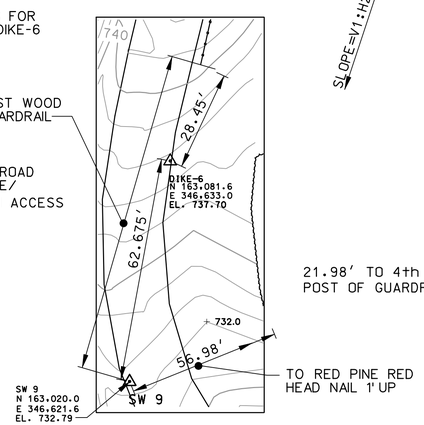

NOTES:
1. SW 9 IS A MAG NAIL SET IN THE WEST ACCESS ROAD.
2. DIKE-6 PK NAIL SET IN THE WEST ACCESS ROAD.

SURVEY TIES FOR POINTS SW 9 & DIKE-6
SCALE: N. T. S.

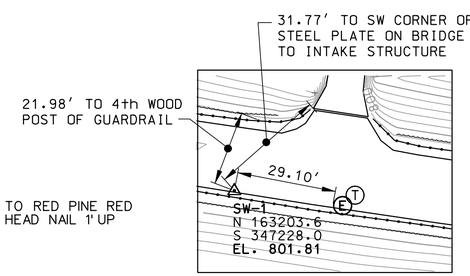

NOTE: SW-1 IS A MAG NAIL SET IN THE PAVEMENT ON TOP OF DAM.

SURVEY TIE FOR POINT SW-1
SCALE: N. T. S.

NOTES:

1. THE SURVEY INFORMATION IS FROM THE CORPS ENGINEERS' SURVEY, PERFORMED ON NOVEMBER, 2003 THROUGH FEBRUARY, 2004 AND ADDITIONAL SURVEY AUGUST, 2004.

2. COORDINATES ARE BASED ON NAD1927, THE NEW HAMPSHIRE STATE PLAN COORDINATE SYSTEM.

3. VERTICAL CONTROL POINT "BM" IS A DISK ON INTAKE STRUCTURE ABUTMENT, ELEVATION 801.36' NGVD 1929.

4. CONSTRUCTION STAGING AREA TO BE DETERMINED DURING THE PRECONSTRUCTION MEETING.

INDEX TO DRAWINGS

SHEET NO.		DESIGN FILE	TITLE
1	G-1	OBDGBS.DGN	COVER SHEET
2	C-1	OBDC101.S02	GENERAL PLAN, LEGEND, INDEX TO DRAWINGS AND NOTES
3	C-2	OBDC102.S03	SITE PLAN - EXISTING CONDITION AND CONTROL LINES
4	C-3	OBDC103.S04	SPILLWAY EXCAVATION PLAN
5	C-4	OBDC301.S05	SPILLWAY PROFILE AND SECTIONS
6	C-5	OBDC104.S06	WETLAND REPLICATION, SITE PLAN, SECTION, CONTROL DATA & EROSION/ SEDIMENTATION CONTROL DETAILS
7	C-6	OBDC105.S07	DIKE - SITE PLAN
8	C-7	OBDC302.S08	DIKE - PROFILE AND SECTIONS
9	S-1	OBDS101.S09	SPILLWAY SILL, PLAN AND ELEVATION
10	S-2	OBDS501.S10	SPILLWAY SILL, SECTIONS AND DETAILS
FUSEGATE DRAWINGS			
1	SF-1	OBDS101.SF1	FUSEGATE GENERAL ARRANGEMENT
2	SF-2		SHEET NOT USED
3	SF-3	OBDS303.SF3	FUSEGATE MODULES PLAN AND ELEVATION
4	SF-4	OBDS204.SF4	FUSEGATE MODULE BALLAST PLAN AND ELEVATION
5	SF-5	OBDS305.SF5	FUSEGATE REINFORCEMENT DETAIL
6	SF-6	OBDS506.SF6	FUSEGATE JACKING SHOES
7	SF-7	OBDS507.SF7	FUSEGATE INLET WELLS
8	SF-8	OBDS108.SF8	FUSEGATE WATERTIGHTNESS SEAL ARRANGEMENT
9	SF-9	OBDS309.SF9	FUSEGATE WATERTIGHTNESS SEAL DETAILS I
10	SF-10	OBDS510.SF10	FUSEGATE WATERTIGHTNESS SEAL DETAILS II
INFORMATION DRAWINGS			
12 OF 60		CT-1-4089	OTTER BROOK DAM, SPILLWAY, PLAN, PROFILE & SECTIONS
13 OF 60		CT-1-4090	OTTER BROOK DAM, SPILLWAY, DETAILS

LEGEND

NEW	EXISTING	DESCRIPTION
		FILL SLOPE
		CUT SLOPE
		STONE PROTECTION
		EXCAVATION
		REMOVE EXISTING CONC. WEIR
		EXCAVATION OF FUSEGATE FOOTING
		LIMITS OF CONSTRUCTION/ EROSION & SEDIMENTATION CONTROL
		GUARD RAIL
		FENCE LINE
		STONE PROTECTION (SHELL)
		STONE PROTECTION (CORE)
		CONCRETE
	POLE •48/51	UTILITY POLE & NUMBER
		TREE LINE
		CRABAPPLE TREE
		EARTH LINE
		ROCK LINE
	T	TELEPHONE MANHOLE
	E	ELETRIC MANHOLE
		SURVEY CONTROL POINT
	W 03	WETLAND FLAG
	+ 802.1	SPOT ELEVATION

US Army Corps of Engineers
New England District

Symbol	Description	Date	Appr.	Symbol	Description	Date	Appr.

Designed by: Jenny Tan
Drawn by: Jenny Tan / Annie Chin
Reviewed by: Bob Meader
Submitted by: /s/Joseph Lamparo Team Leader, Civil Engrg. Sect.

Date: March 2005
Rev.
Solicitation no. W912NJ-05-B-0005
Drawing code: CON-414
File name: S-obdc101.S02
Plot date: 9 March 2005
Plot scale: 1" = 60'

U.S. ARMY ENGINEER DISTRICT
CORPS OF ENGINEERS
CONCORD, MASSACHUSETTS

WATER RESOURCES DEVELOPMENT PROJECT
OTTER BROOK LAKE
KEENE, NEW HAMPSHIRE
MODIFY SPILLWAY

GENERAL PLAN, LEGEND
INDEX TO DRAWINGS AND NOTES

GRAPHIC SCALE:
1" = 60'
60 0 30 120

Reference number:
C-1
Sheet 2 of 10

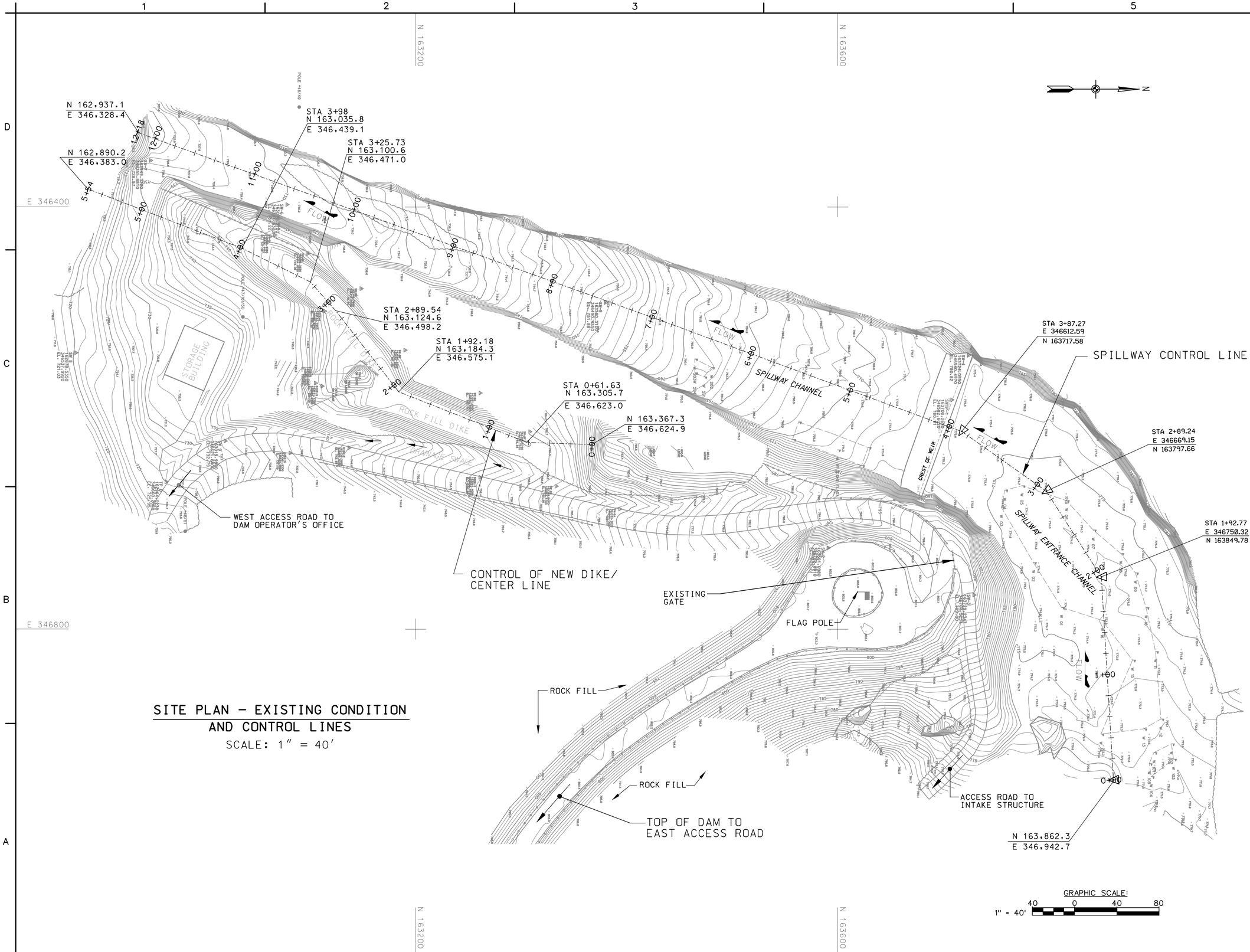

SITE PLAN – EXISTING CONDITION AND CONTROL LINES

SCALE: 1" = 40'

US Army Corps of Engineers
New England District

Symbol	Description	Date	Appr.	Symbol	Description	Date	Appr.

Date: March 2005
Rev.
Solicitation no. W912WJ-05-B-0005
Drawing code: CON-414
File name se4c02.dgn
Plot date: 15 March 2005
Plot scale: 1"=40'

Designed by: Jenny Tan
Drawn by: Jenny Tan
Reviewed by: Bob Meader
Submitted by: Joseph Lamparo
/s/ Joseph Lamparo
Team Leader, Civil Engrg. Sect.

U.S. ARMY ENGINEER DISTRICT
CORPS OF ENGINEERS
CONCORD, MASSACHUSETTS

WATER RESOURCES DEVELOPMENT PROJECT
OTTER BROOK LAKE
KEENE, NEW HAMPSHIRE
MODIFY SPILLWAY

SITE PLAN-
EXISTING CONDITION AND CONTROL LINES

Reference number:
C-2

Sheet 3 of 10

NOTES:

1. NEW PAVEMENT SECTION SHALL BE PER NHDOT STANDARD ROAD AND BRIDGE SPECIFICATIONS, 1990, CONSISTING OF 12" GRAVEL SUB-BASE, 1½" TYPE A BASE COURSE, AND 1" TYPE E BITUMINOUS WEARING COURSE.

2. IN-SITU ROCK TO BE LEFT IN PLACE AND AUGMENTED WITH EXCAVATED ROCK AS NECESSARY TO EL. 775' (MIN.) DURING SPILLWAY EXCAVATION AND FUSEGATE CONSTRUCTION PER SPECIFICATIONS. WIDTH OF TOP OF COFFERDAM = 20' MIN.

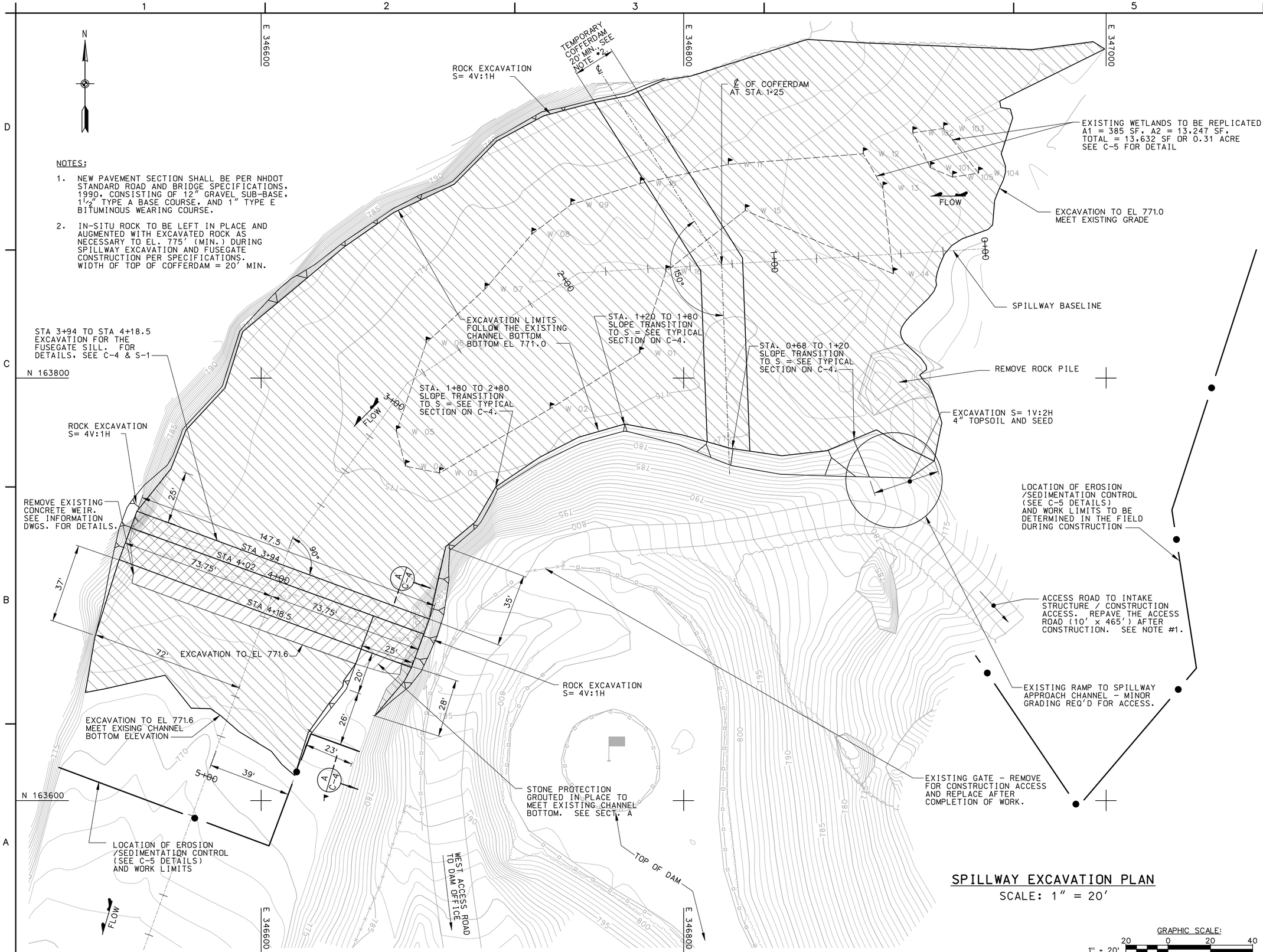

SPILLWAY EXCAVATION PLAN

SCALE: 1" = 20'

GRAPHIC SCALE: 1" = 20' (20 0 20 40)

US Army Corps of Engineers
New England District

Symbol	Description	Date	Appr.	Symbol	Description	Date	Appr.

Date: March 2005 | Rev.
Solicitation no. W912NJ-05-B-0005
Drawing code: CON-414
File name: sp4cs03.dgn
Plot date: 15 March 2005
Plot scale: 1"=20'

Designed by: Jenny Tan
Drawn by: Jenny Tan
Reviewed by: /s/Bob Meader
Submitted by: /s/Joseph Lamparo
Team Leader, Civil Engrg. Sect.

U.S. ARMY ENGINEER DISTRICT
CORPS OF ENGINEERS
CONCORD, MASSACHUSETTS

WATER RESOURCES DEVELOPMENT PROJECT
OTTER BROOK LAKE
KEENE, NEW HAMPSHIRE
MODIFY SPILLWAY

SPILLWAY EXCAVATION PLAN

Reference number:
C-3

Sheet 4 of 10

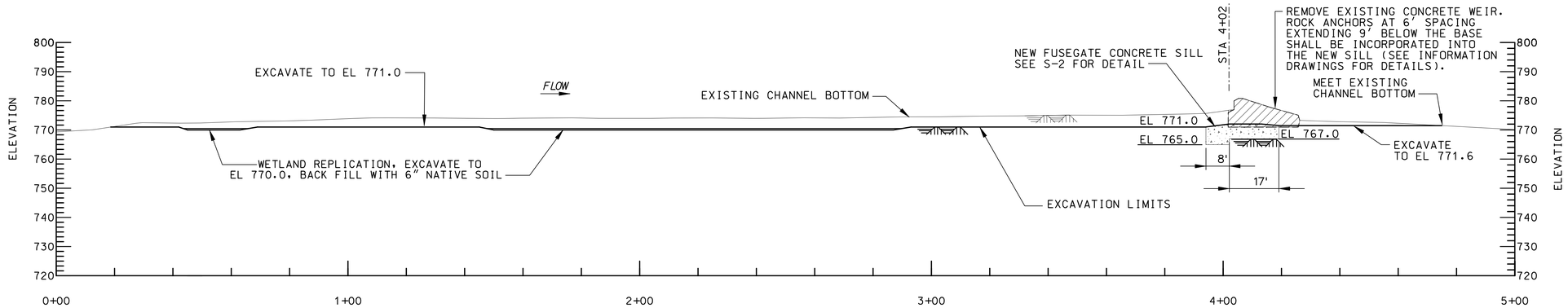

PROFILE ALONG THE CONTROL LINE

SCALE: 1" = 20'

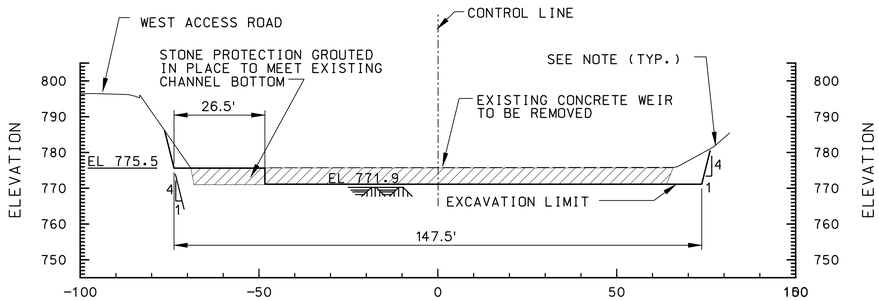

STA. 4+20

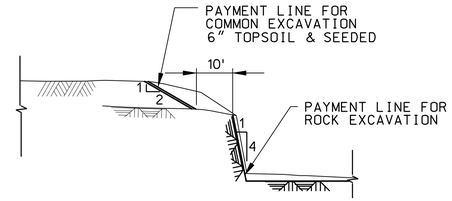

TYPICAL EXCAVATION SECTION

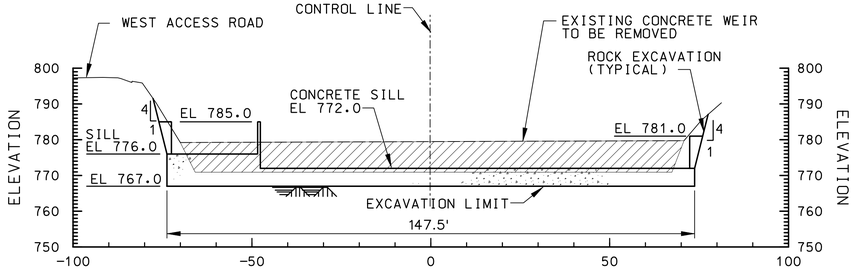

STA 4+10

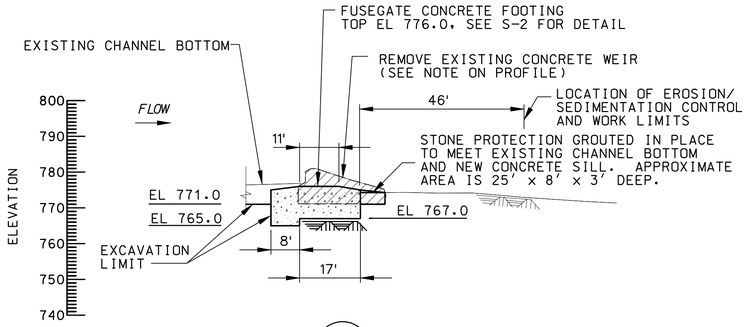

SECTION A / C-3

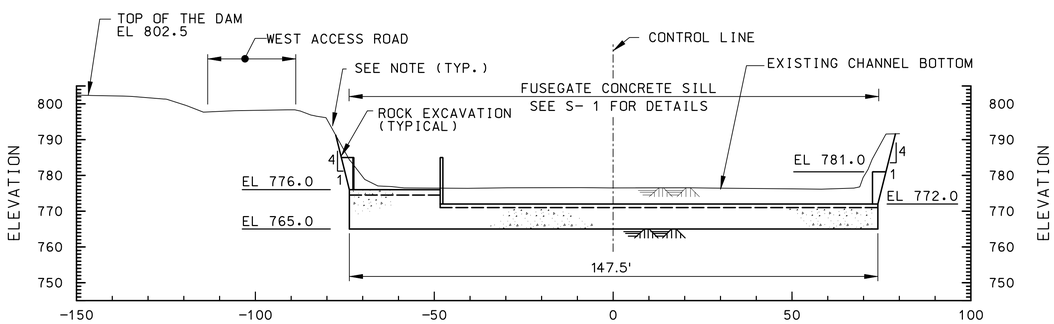

STA 4+00

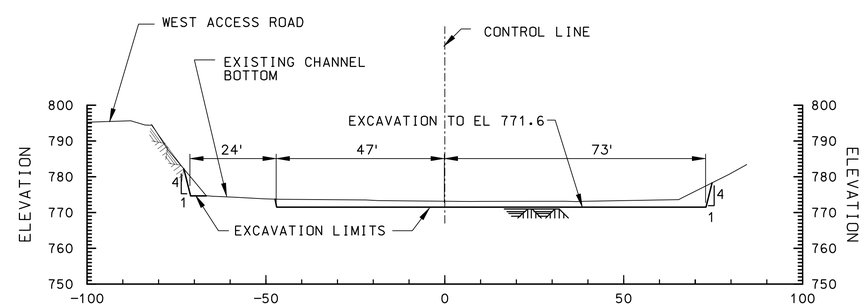

STA 4+30

NOTE:

EXISTING CHANNEL SIDE SLOPES SHOWN ON SECTIONS REPRESENT THE APPROXIMATE CONDITIONS. CONTRACTOR SHALL VERIFY EXISTING CHANNEL SLOPES IN THE FIELD.

SECTIONS

SCALE: 1" = 20'

GRAPHIC SCALE: 1" = 20' (20 0 20 40)

US Army Corps of Engineers
New England District

Symbol	Description	Date	Appr.	Symbol	Description	Date	Appr.

Date: March 2005 | Rev.
Solicitation no. W912KJ-05-B-0005
Drawing code: CON-414
File name sec-3rd.dgn
Plot date: March 2005
Plot scale: 1"=20'

Designed by: Jenny Tan
Drawn by: Jenny Tan
Reviewed by: Bob Meader
Submitted by: Bob Meader
/s/ Joseph Longora
Team Leader, Civil Engrg. Sect.

U.S. ARMY ENGINEER DISTRICT
CORPS OF ENGINEERS
CONCORD, MASSACHUSETTS

WATER RESOURCES DEVELOPMENT PROJECT
OTTER BROOK LAKE
KEENE, NEW HAMPSHIRE
MODIFY SPILLWAY

SPILLWAY PROFILE AND SECTIONS

Reference number:
C-4

Sheet 5 of 10

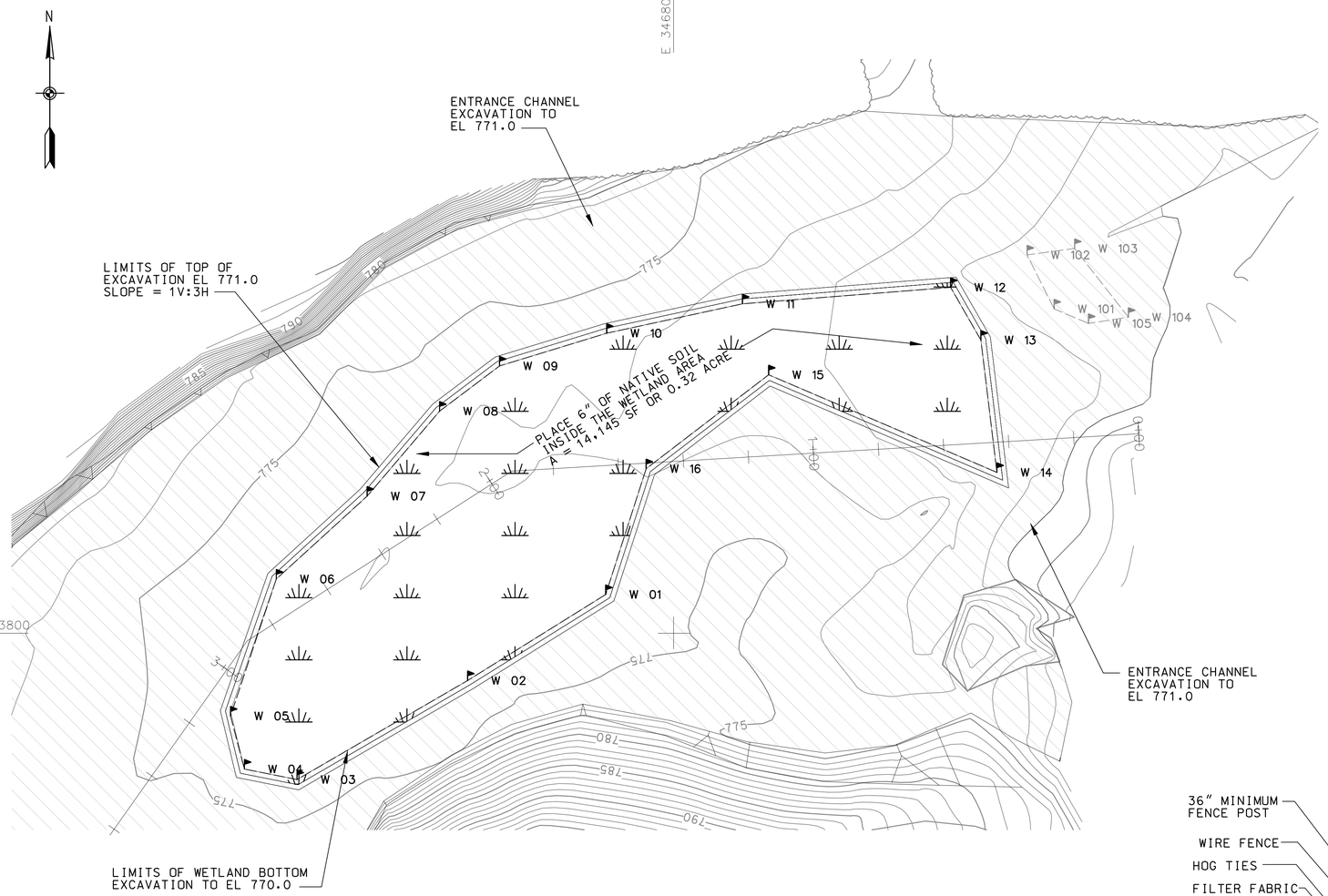

WETLAND REPLICATION – SITE PLAN

SCALE: 1" = 20'

CONTROL DATA – WETLAND EXCAVATION BOTTOM			
PT. NO.	COORDINATES	PT. NO.	COORDINATES
W 01	N 163,811.9 E 346,779.2	W 05	N 163,775.0 E 346,664.3
W 02	N 163,785.5 E 346,736.8	W 06	N 163,816.7 E 346,678.1
W 03	N 163,755.1 E 346,684.5	W 07	N 163,842.1 E 346,706.0
W 04	N 163,758.3 E 346,668.3	W 08	N 163,868.2 E 346,728.2
W 09	N 163,882.1 E 346,746.6	W 13	N 163,890.0 E 346,894.3
W 10	N 163,892.1 E 346,779.5	W 14	N 163,849.4 E 346,899.2
W 11	N 163,901.1 E 346,821.1	W 15	N 163,879.4 E 346,829.2
W 12	N 163,906.2 E 346,885.0	W 16	N 163,850.5 E 346,791.6

NOTE:

WETLAND REPLICATION AND UPLAND REPLICATION REQUIREMENTS AS SPECIFIED IN SPECIFICATIONS SECTION 02950.

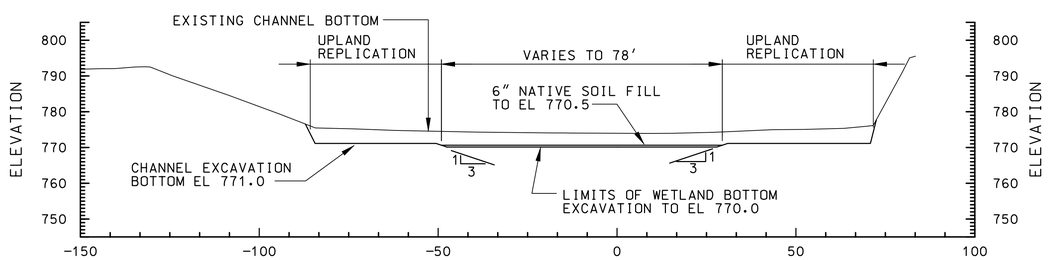

SECTION STA 2+00

SCALE: 1" = 20'

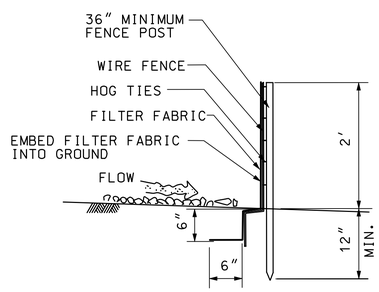

SILT FENCE

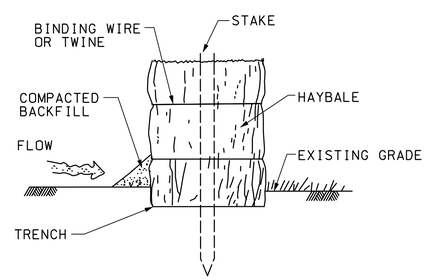

STAKED HAYBALE

NOTES:
1. EXCAVATE A TRENCH 4" DEEP AND THE WIDTH OF A HAYBALE.
2. PLACE AND STAKE HAYBALES TWO STAKES PER BALE.
3. WEDGE LOOSE HAYBALES TO CREATE A CONTINUOUS BARRIER.
4. BACKFILL AND COMPACT THE EXCAVATED SOIL AS SHOWN ON THE UPHILL SIDE OF THE BARRIER TO PREVENT PIPING.

EROSION/ SEDIMENTATION CONTROL DETAILS

N.T.S.

GRAPHIC SCALE:
1" = 20'
20 0 20 40

US Army Corps of Engineers
New England District

Symbol	Description	Date	Appr.	Symbol	Description	Date	Appr.

Designed by: Jenny Tan
Drawn by: Jenny Tan
Reviewed by: Bob Meader
Submitted by: /s/ Joseph Langarg, Team Leader, Civil Engrg. Sect.
Date: March 2005
Rev.
Solicitation no. W912KJ-05-B-0005
Drawing code: CON-414
File name: sedcntl.dgn
Plot date: 9 March 2005
Plot scale: 1"=20'

U.S. ARMY ENGINEER DISTRICT
CORPS OF ENGINEERS
CONCORD, MASSACHUSETTS

WATER RESOURCES DEVELOPMENT PROJECT
OTTER BROOK LAKE
KEENE, NEW HAMPSHIRE
MODIFY SPILLWAY

WETLAND REPLICATION, SITE PLAN, SECTION, CONTROL DATA & EROSION/ SEDIMENTATION CONTROL DETAILS

Reference number:
C-5
Sheet 6 of 10

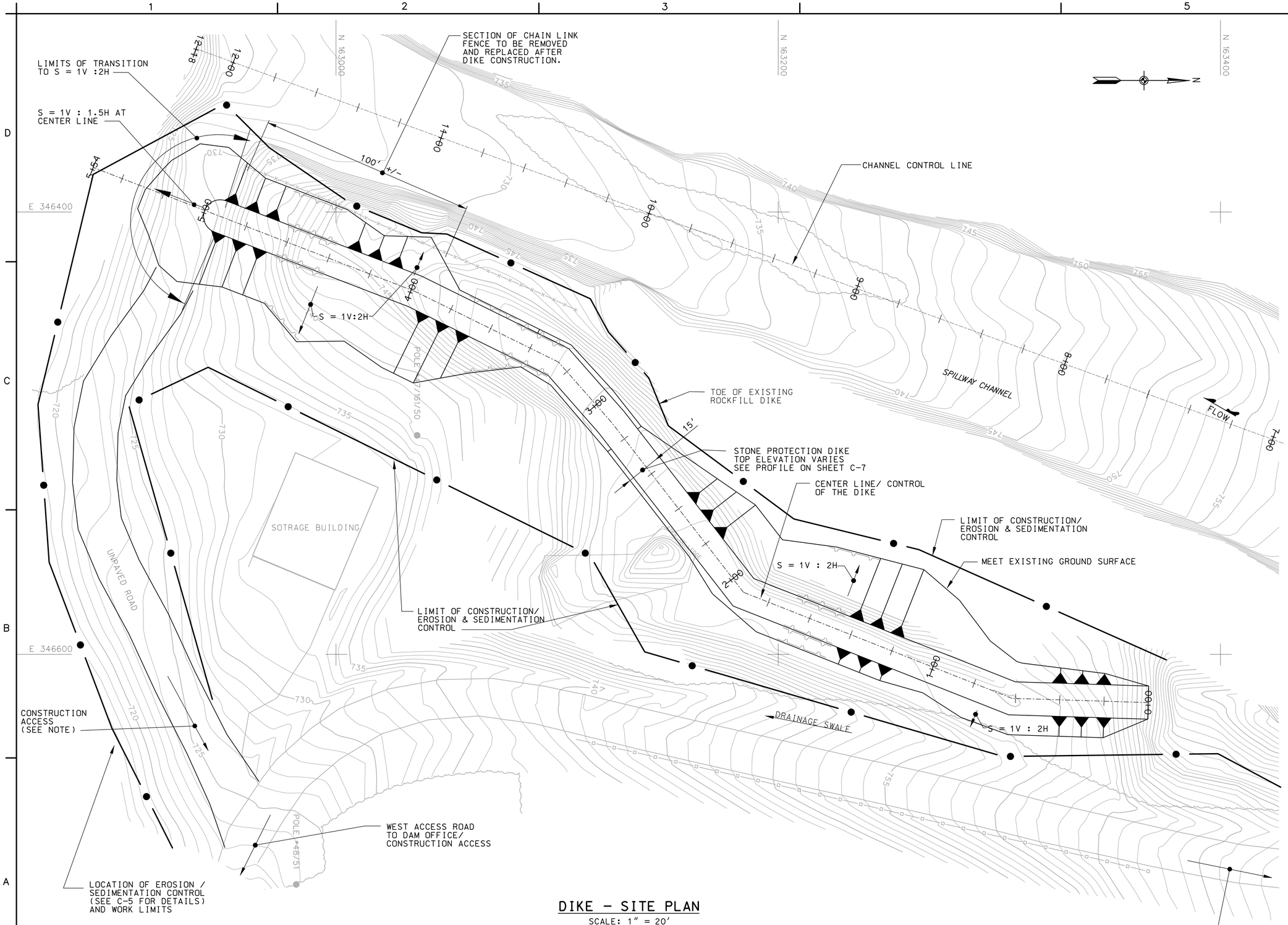

DIKE - SITE PLAN

SCALE: 1" = 20'

NOTE:

SEE SPECIFICATIONS SECTION 01500, 1.13 ACCESS AND HAUL ROADS.

US Army Corps of Engineers
New England District

Symbol	Description	Date	Appr.	Symbol	Description	Date	Appr.

Designed by: Jenny Tan
Drawn by: Jenny Tan
Reviewed by: Bob Meader
Submitted by: /s/Joseph Lampara, Team Leader, Civil Engrg. Sect.

Date: March 2005
Rev.
Solicitation no. W912NJ-05-B-0005
Drawing code: CON-414
File name & path: Plot date: March 2005
Plot scale: 1"=20'

U.S. ARMY ENGINEER DISTRICT
CORPS OF ENGINEERS
CONCORD, MASSACHUSETTS

WATER RESOURCES DEVELOPMENT PROJECT
OTTER BROOK LAKE
KEENE, NEW HAMPSHIRE
MODIFY SPILLWAY

DIKE - SITE PLAN

Reference number:
C-6
Sheet 7 of 10

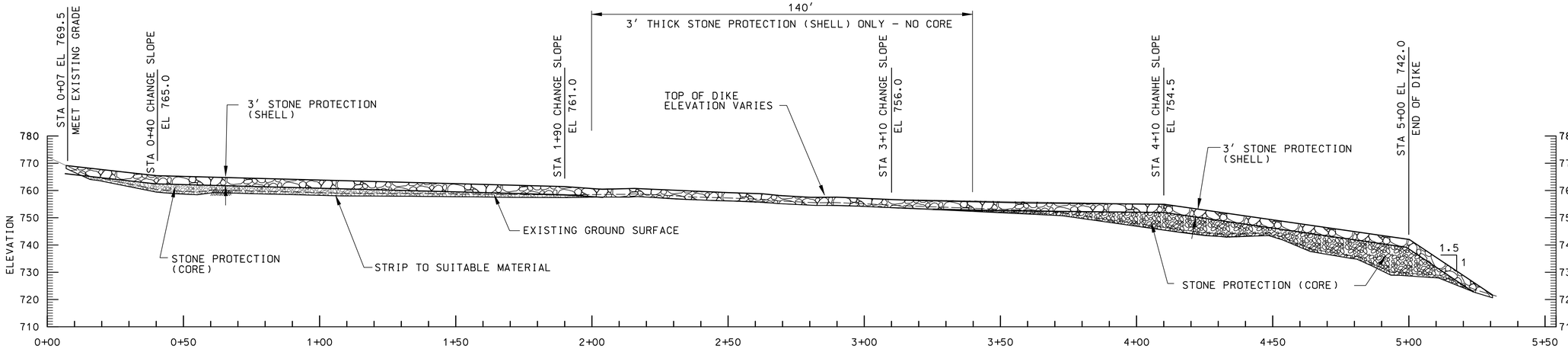

PROFILE ALONG THE CONTROL LINE

SCALE: 1" = 20'

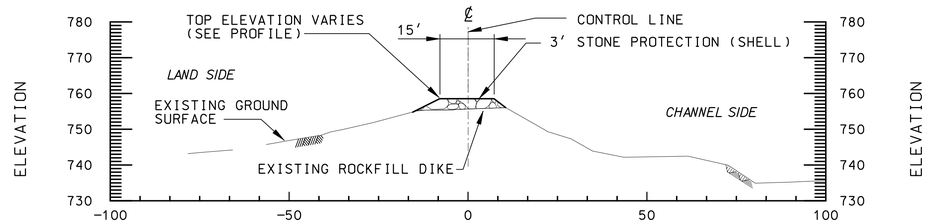

STATION 2+80

SECTION TYPICAL STA 2+00 TO 3+40

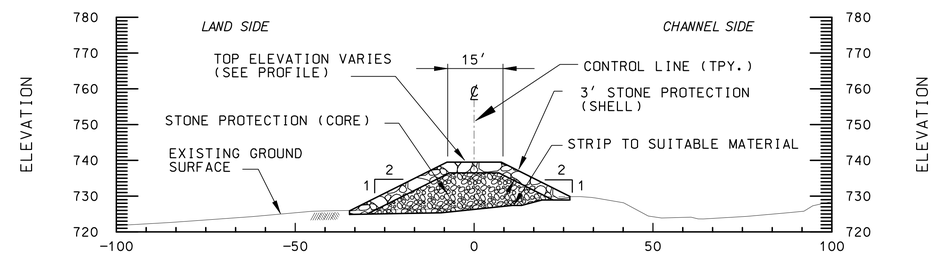

STATION 5+00

SECTION - TYPICAL STA.4+80 TO END OF DIKE

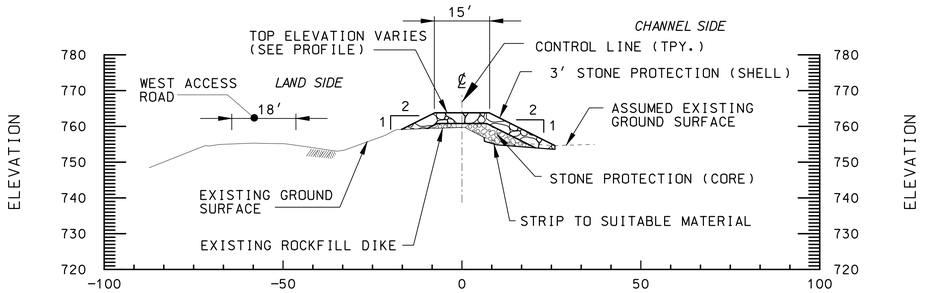

STATION 0+80

SECTION TYPICAL STA 0+60 TO 2+00

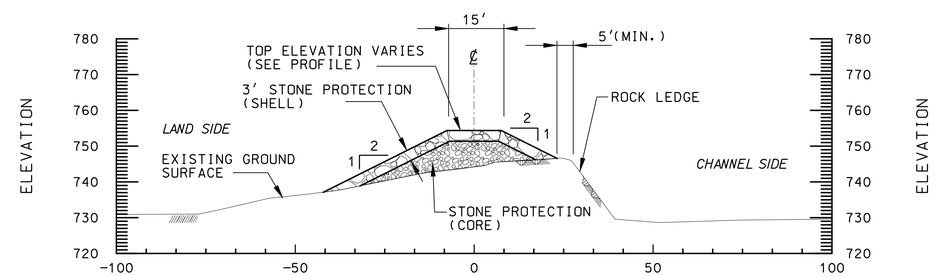

STATION 4+40

SECTION - TYPICAL STA.3+80 TO 4+80

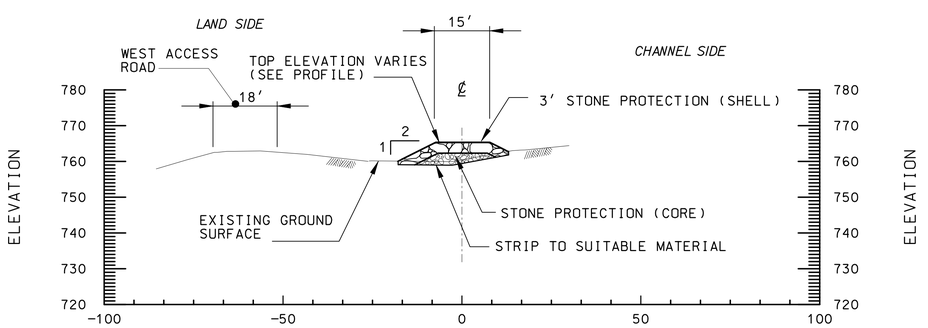

STATION 0+40

SECTION TYPICAL STA 0+20 TO 0+60

SECTIONS

SCALE: 1" = 20'

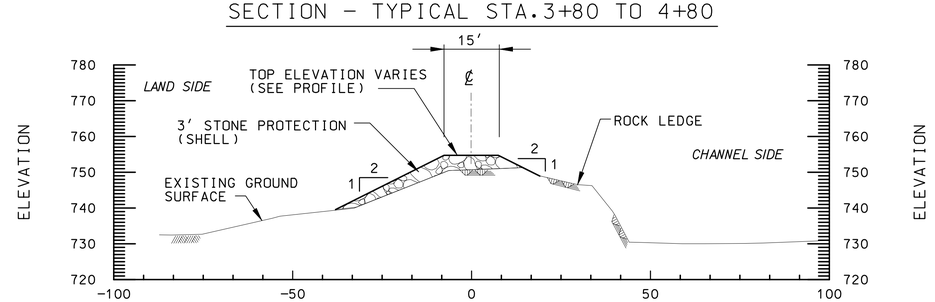

STATION 3+80

SECTION - TYPICAL STA.3+40 TO 3+80

GRAPHIC SCALE:

1" = 20'

20 0 20 40

US Army Corps of Engineers
New England District

Symbol	Description	Date	Appr.	Symbol	Description	Date	Appr.

Designed by: Jenny Tan
Drawn by: Jenny Tan
Reviewed by: Bob Meader
Submitted by: /s/Joseph Lamparo
Team Leader, Civil Engrg. Sect.

Date: March 2005
Rev.
Solicitation no. W912NJ-05-B-0005
Drawing code: CON-414
File name: s-sec-312-208
Plot date: 8-Mar-2005
Plot scale: 1"=20'

U.S. ARMY ENGINEER DISTRICT
CORPS OF ENGINEERS
CONCORD, MASSACHUSETTS

WATER RESOURCES DEVELOPMENT PROJECT
OTTER BROOK LAKE
KEENE, NEW HAMPSHIRE
MODIFY SPILLWAY

DIKE - PROFILE AND SECTIONS

Reference number:
C-7

Sheet 8 of 10

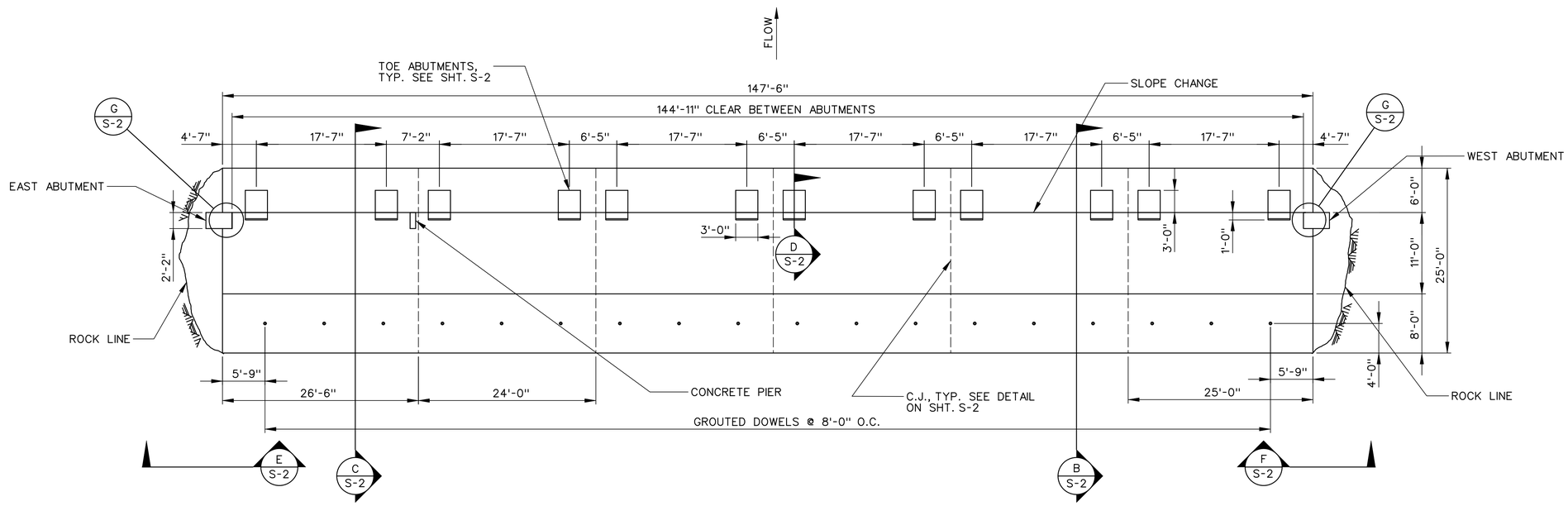

PLAN - SPILLWAY SILL
SCALE: 1/8" = 1'-0"

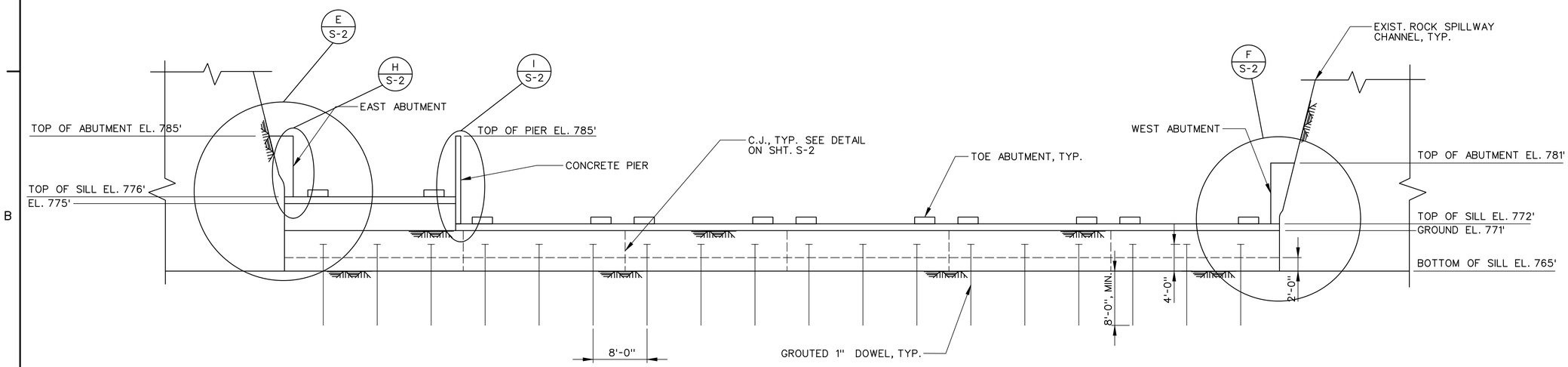

UPSTREAM ELEVATION - SPILLWAY SILL
SCALE: 1/8" = 1'-0"

GENERAL NOTES

1. FOR CONTROL AND LOCATION OF NEW SILL, SEE SHEET. C-4.
2. FOR FUSEGATE DRAWINGS, SEE SHEETS SF-1 TO SF-10.
3. EXISTING ROCK ANCHORS UNDER OLD SPILLWAY WEIR SHALL BE INCORPORATED INTO THE NEW CONCRETE SILL IN THEIR ENTIRETY. CARE SHALL BE TAKEN TO PREVENT DAMAGE TO THE EXISTING ANCHORS DURING DEMOLITION WORK.

GRAPHIC SCALE:
1/8" = 1'-0" 4' 0 4' 8' 12' 16' 20'

US Army Corps of Engineers
New England District

Symbol	Description	Date	Appr.	Symbol	Description	Date	Appr.

Designed by: David Cole
Drawn by: Don Hassett
Reviewed by:
Submitted by: Jennifer Flanagan
Date: March 2005
Rev.
Solicitation no. W912EN-03-B-0005
Drawing code: CON-414
File name: 0304ctn.dgn
Plot date: 9 March 2005
Plot scale: 1/4" = 1'-0"

U.S. ARMY ENGINEER DISTRICT
CORPS OF ENGINEERS
CONCORD, MASSACHUSETTS

WATER RESOURCES DEVELOPMENT PROJECT
OTTER BROOK LAKE
KEENE, NEW HAMPSHIRE
MODIFY SPILLWAY

SPILLWAY SILL PLAN AND ELEVATION

Reference number:
S-1
Sheet 9 of 10

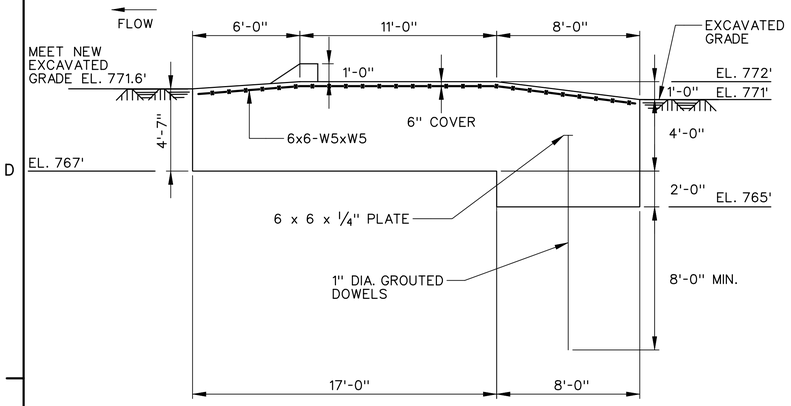

SPILLWAY SILL SECTION (B / S-1)
SCALE: 1/4" = 1'-0"

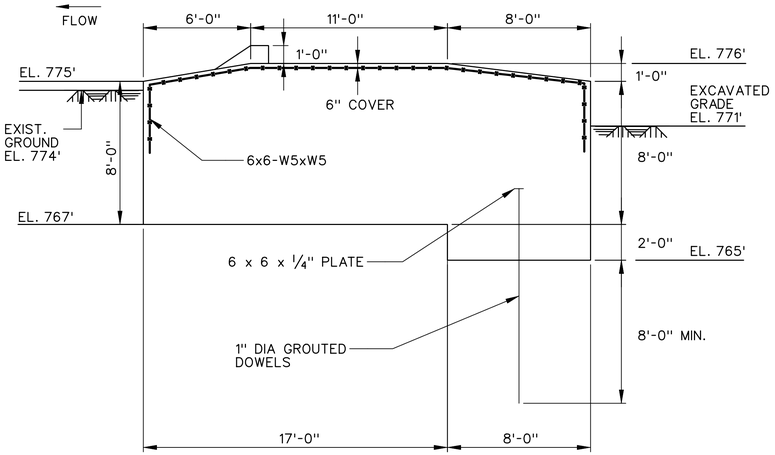

SPILLWAY SILL SECTION (C / S-1)
SCALE: 1/4" = 1'-0"

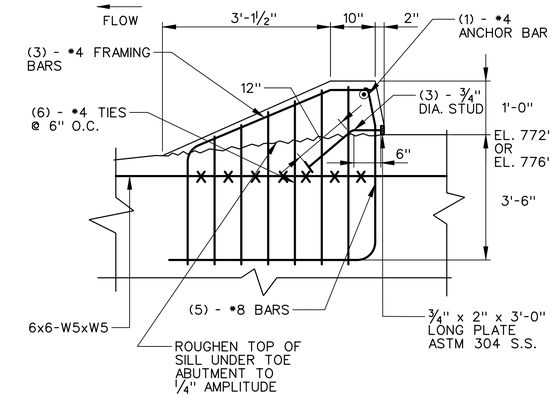

TYPICAL TOE ABUTMENT (D / S-1)
SCALE: 3/4" = 1'-0"

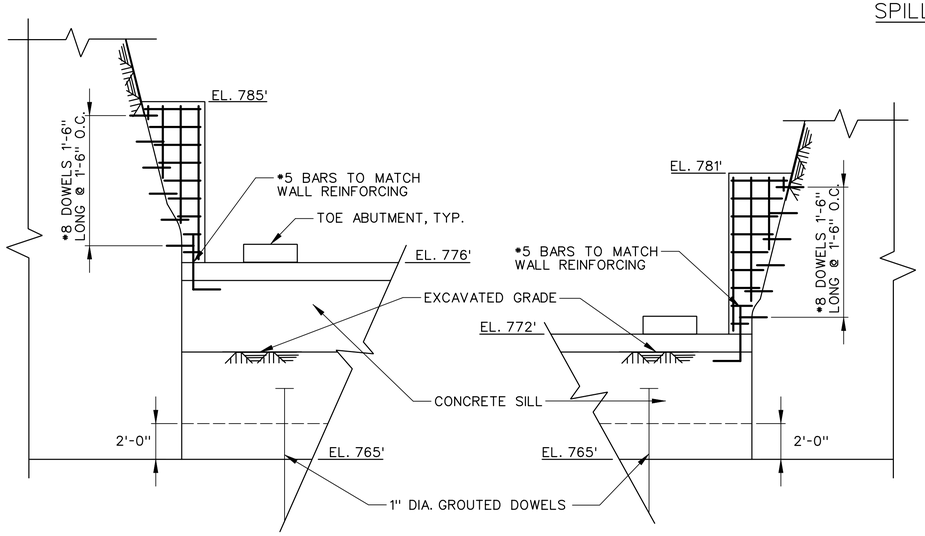

EAST ABUTMENT (E / S-1)
SCALE: 1/4" = 1'-0"

WEST ABUTMENT (F / S-1)
SCALE: 1/4" = 1'-0"

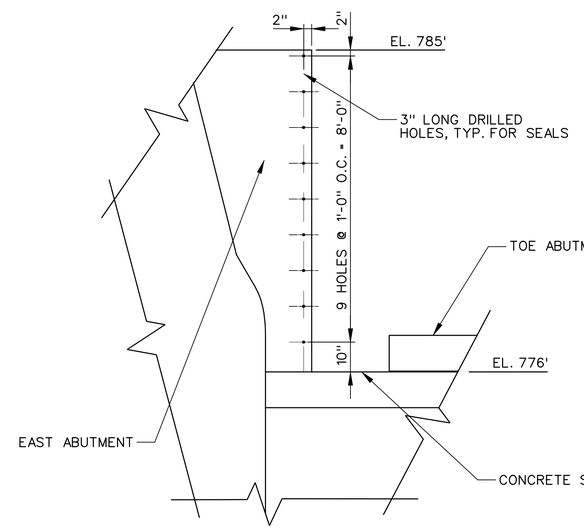

DETAIL H
SCALE: 1/2" = 1'-0"

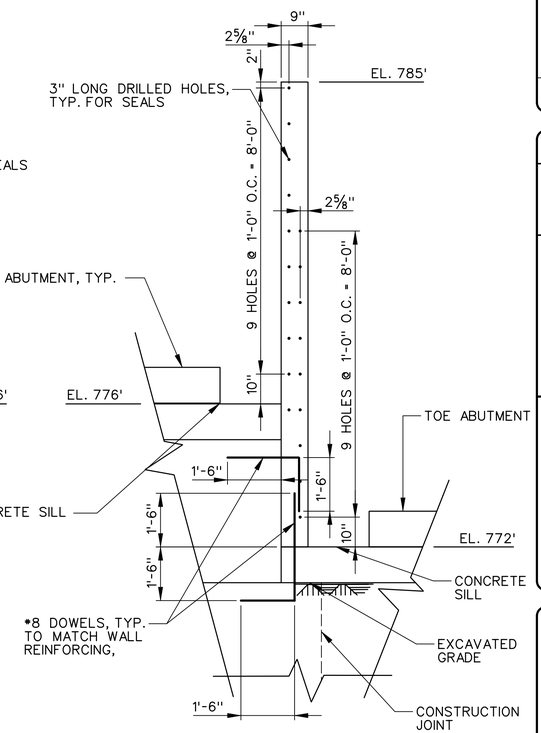

PIER DETAIL I
SCALE: 1/2" = 1'-0"

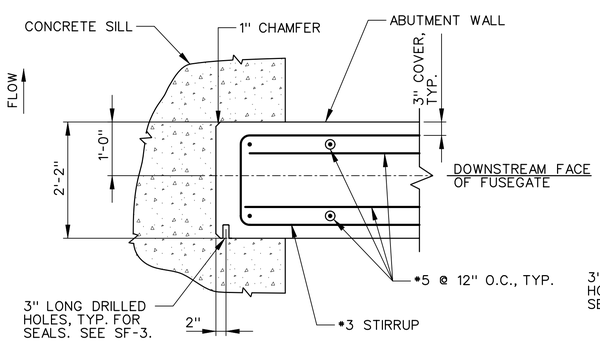

ABUTMENT DETAIL G
SCALE: 3/4" = 1'-0"

NOTE: WEST ABUTMENT SHOWN, EAST ABUTMENT OPPOSITE HAND.

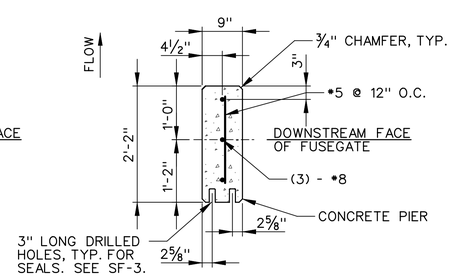

PIER SECTION J-J
SCALE: 3/4" = 1'-0"

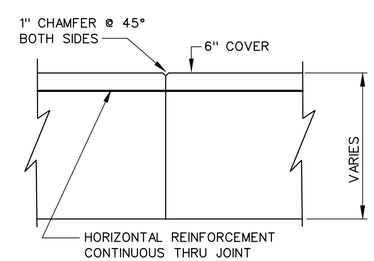

CONSTRUCTION JOINT DETAIL
SCALE: 1/2" = 1'-0"

GRAPHIC SCALE:
1/4" = 1'-0" 4' 0 4' 8'
GRAPHIC SCALE:
1/2" = 1'-0" 1' 0 1' 2' 3' 4' 5'
GRAPHIC SCALE:
3/4" = 1'-0" 1' 0 1' 2' 3'

US Army Corps of Engineers
New England District

Symbol	Description	Date	Appr.	Symbol	Description	Date	Appr.

Date: March 2005
Rev.
Solicitation no. W912NJ-05-B-0005
Drawing code: CON-414
File name: S-SPILL01.DGN
Plot date: 9 March 2005
Plot scale: 1/4" = 1'-0"

Designed by: David Cole
Drawn by: Don Hassett
Reviewed by: /s/Jennifer Flanagan
Submitted by: /s/George Norton
Chief, General Engrg. Sect.

U.S. ARMY ENGINEER DISTRICT
CORPS OF ENGINEERS
CONCORD, MASSACHUSETTS

WATER RESOURCES DEVELOPMENT PROJECT
OTTER BROOK LAKE
KEENE, NEW HAMPSHIRE
MODIFY SPILLWAY

SPILLWAY SILL SECTIONS AND DETAILS

Reference number:
S-2
Sheet 10 of 10

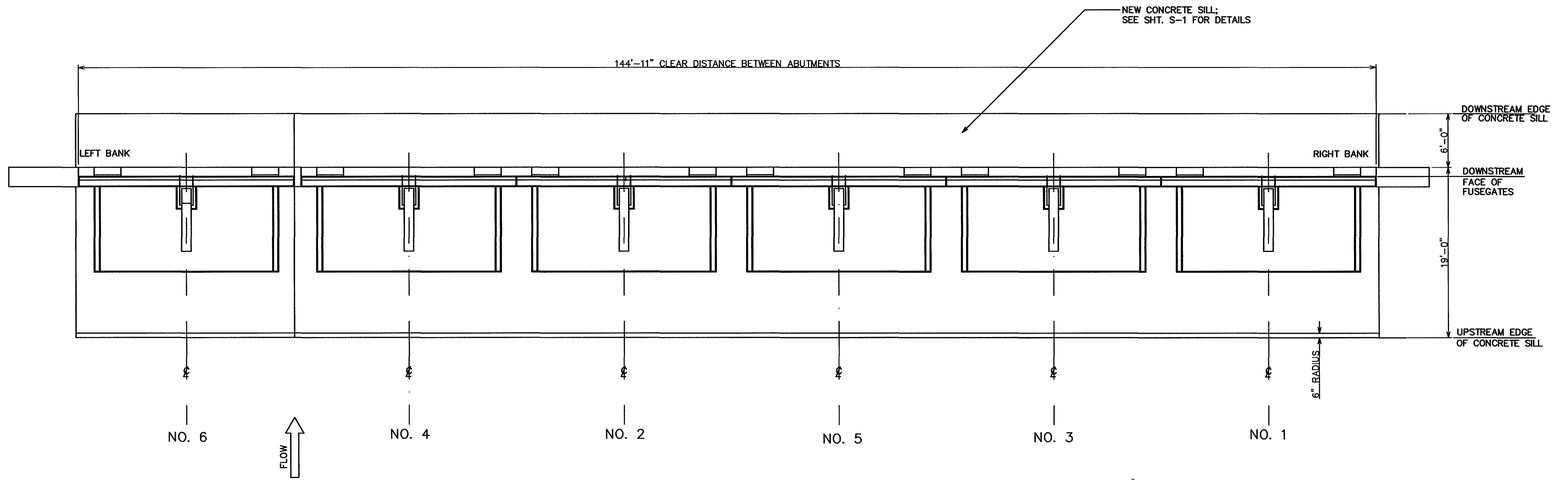

PLAN VIEW OF FUSEGATES
1/8"=1'-0"

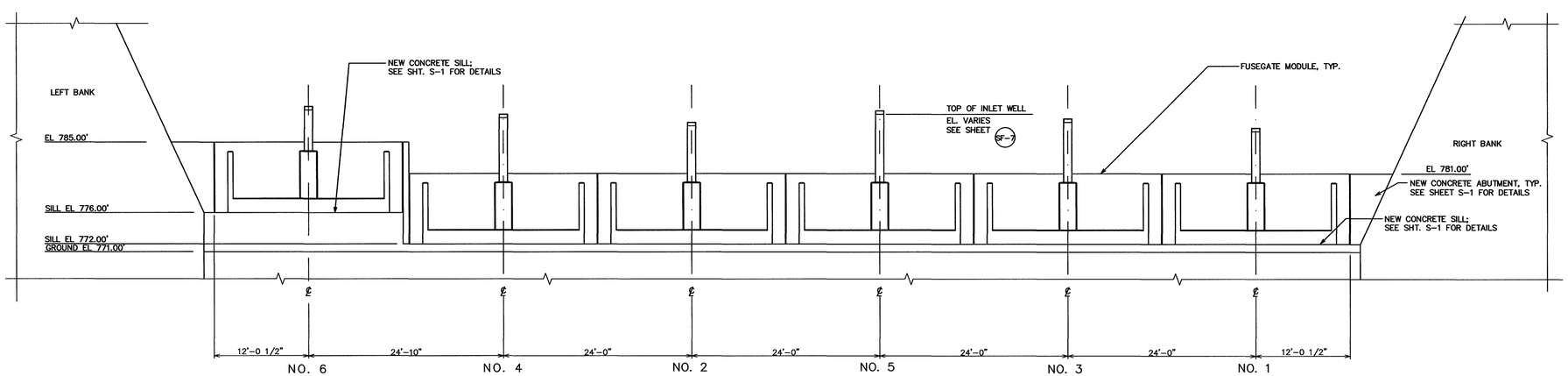

UPSTREAM ELEVATION OF FUSEGATES
1/8"=1'-0"

NOTE:

FOR CONCRETE SILL AND ABUTMENT DETAILS, SEE SHEETS S-1 AND S-2.

THE STATE OF NEW HAMPSHIRE
STEPHEN T. RUELL
No. 4105
REGISTERED PROFESSIONAL ENGINEER

GRAPHIC SCALE
8' 4' 0 8'
SCALE=1/8"=1'-0"

US Army Corps of Engineers
New England District

Symbol	Description	Date	Appr.	Symbol	Description	Date	Appr.

Designed by: KAM
Drawn by: PK/PJ
Reviewed by: STR
Submitted by: Hasan Kocaban, Project Manager Hydroplus Inc.
Date: 2-08-05
Rev
Solicitation no. W912WJ-05-B-0005
Drawing code: CON-414
File name: 080101.SF1
Plot date: 23-02-2005
Plot scale: 8:1 / IN

U.S. ARMY ENGINEER DISTRICT
CORPS OF ENGINEERS
CONCORD, MASSACHUSETTS

HYDROPLUS INC.
FALLS CHURCH, VA.
hydroplusUSA@aol.com

WATER RESOURCES DEVELOPMENT PROJECT
OTTER BROOK LAKE
KEENE, NEW HAMPSHIRE
MODIFY SPILLWAY

FUSEGATE GENERAL ARRANGEMENT

Reference number:
SF-1

Sheet 1 of 10

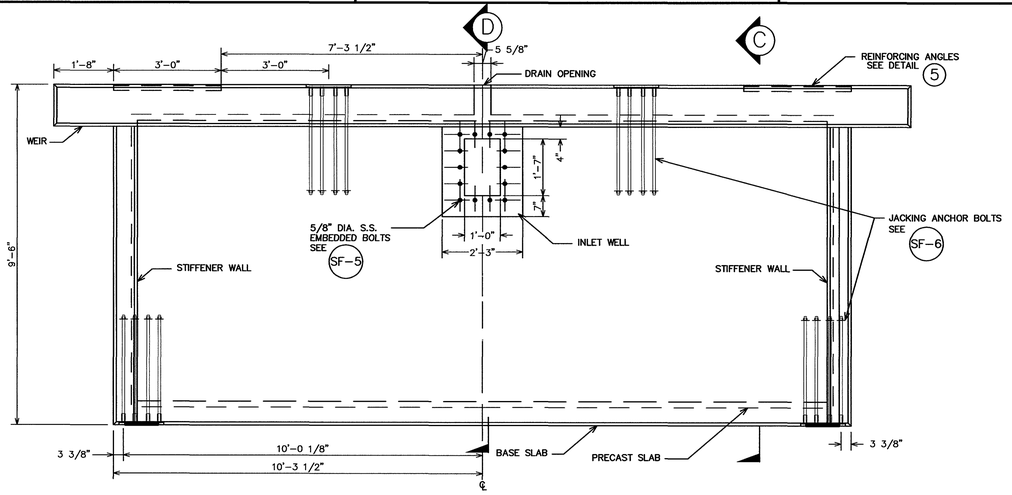

PLAN VIEW
SCALE: 1/2"=1'-0"

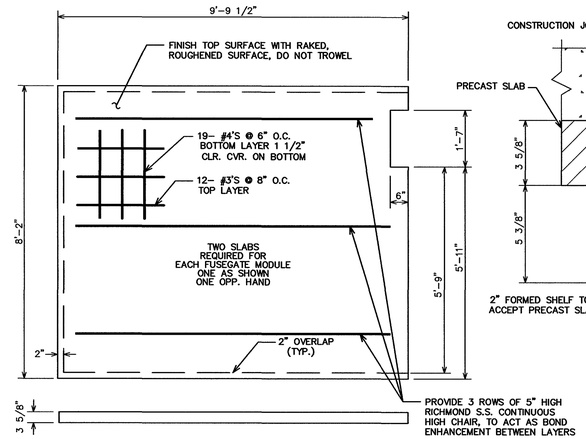

PRECAST SLAB
SCALE: 1/2"=1'-0"

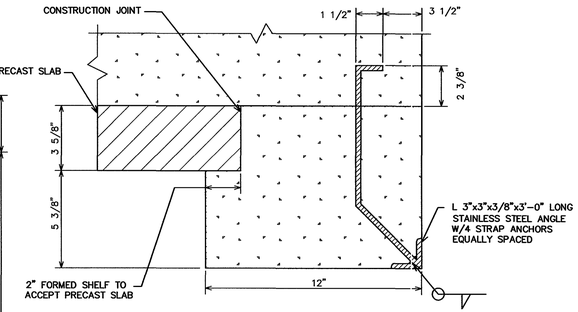

DETAIL 5
3"=1'-0"

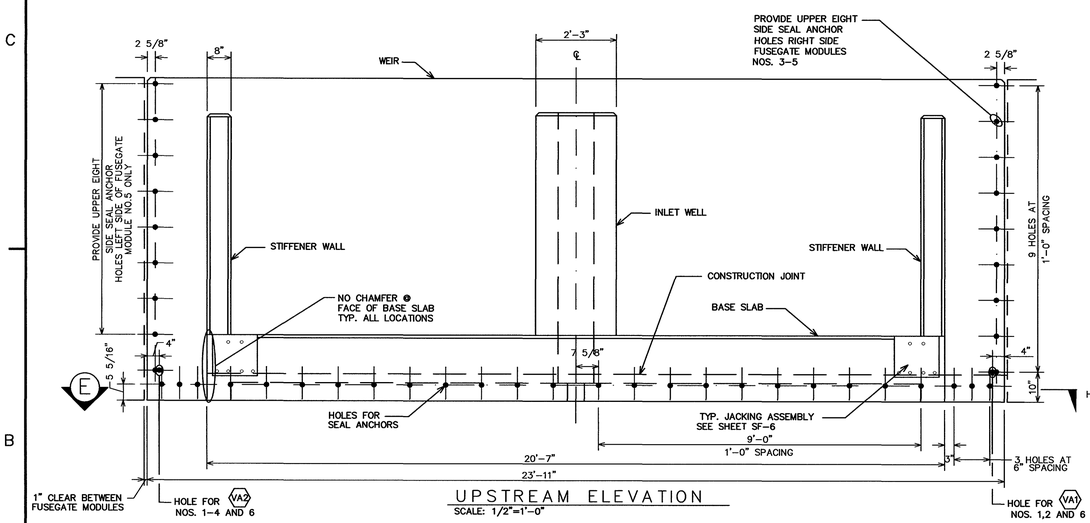

UPSTREAM ELEVATION
SCALE: 1/2"=1'-0"

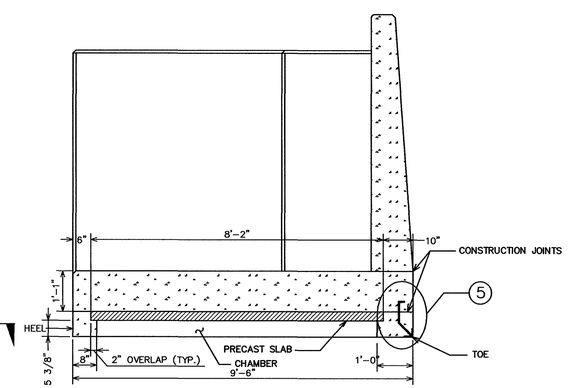

SECTION C
SCALE: 1/2"=1'-0"

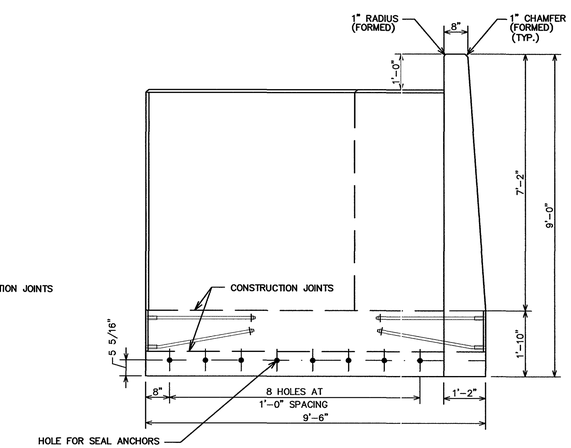

LATERAL SIDE ELEVATION
SCALE: 1/2"=1'-0"

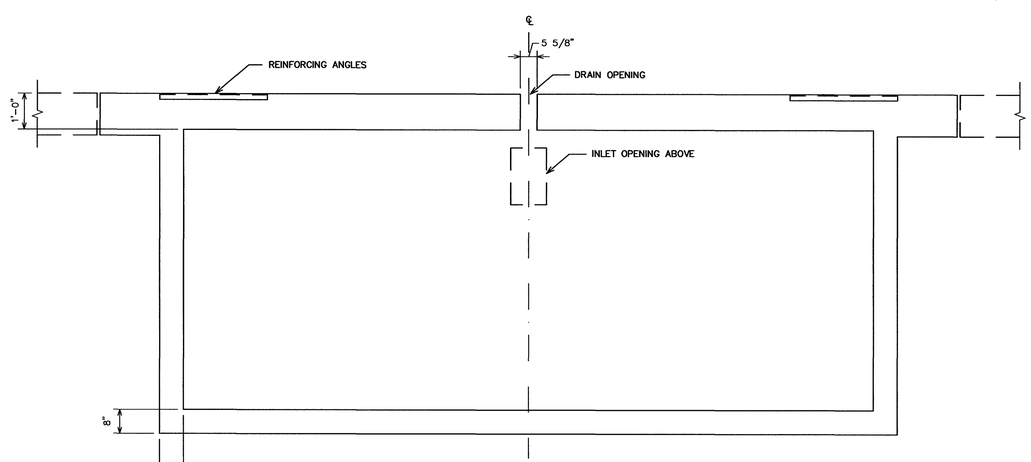

BOTTOM VIEW SECTION E
SCALE: 1/2"=1'-0"

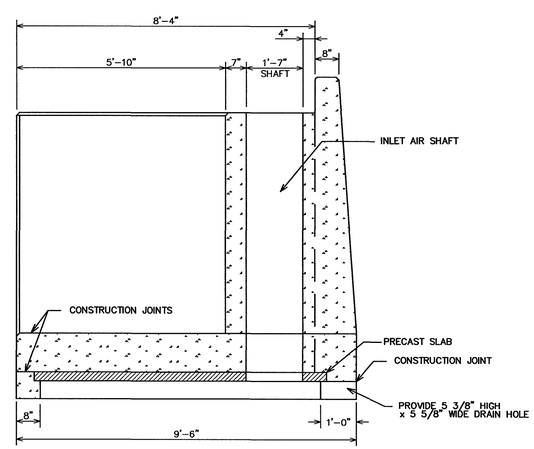

SECTION D
SCALE: 1/2"=1'-0"

NOTES:
1. ALL FORMED SURFACES OF FUSEGATES EXPOSED IN THE FINISHED STRUCTURE SHALL BE CLASS "B"
2. ALL HOLES DRILLED, 3" LONG DIAMETER FOR SEAL ANCHOR SHALL BE PER MANUFACTURES INSTRUCTIONS
3. CONSTRUCTION JOINT FOR FIRST POUR MUST BE ABOVE ℄ OF SEAL ANCHOR HOLES, SEE DETAIL 5

GRAPHIC SCALE
2' 1' 0 2'
SCALE=1/2"=1'-0"
3 0 3
SCALE=3"=1'-0"

US Army Corps of Engineers
New England District

Symbol	Description	Date	Appr.	Symbol	Description	Date	Appr.

Date: 2-08-05
Rev
Solicitation no. W912WJ-05-B-0005
Drawing code: CON-414
File name 080303.SF3
Plot date 23-02-2005
Plot scale 1:1/2 / IN

Designed by: KAM
Drawn by: PK/PJ
Reviewed by: STR
Submitted by: Hasan Kocaho, Project Manager Hydroplus Inc.

U.S. ARMY ENGINEER DISTRICT
CORPS OF ENGINEERS
CONCORD, MASSACHUSETTS

HYDROPLUS INC.
FALLS CHURCH, VA.
hydroplusUSA@aol.com

WATER RESOURCES DEVELOPMENT PROJECT
OTTER BROOK LAKE
KEENE, NEW HAMPSHIRE
MODIFY SPILLWAY

FUSEGATE MODULES
PLAN AND ELEVATION

Reference number:
SF-3

Sheet 3 of 10

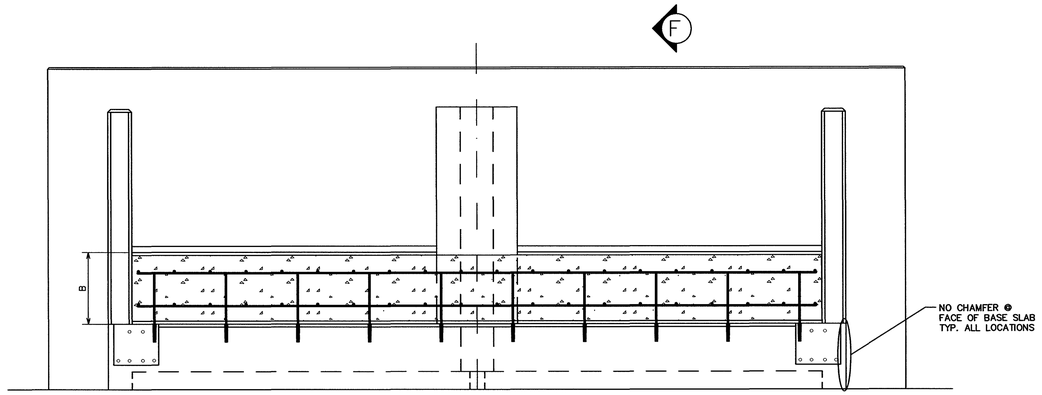

UPSTREAM VIEW
OF BALLAST CONCRETE
SCALE: 1/2"=1'-0"

FUSEGATE BALLAST	
MODULE NO.	B (INCHES)
1	20 5/16"
2	26 5/16"
3	32 5/8"
4	39 1/8"
5	47 11/16"
6	39 7/16"

B DIMENSION WILL BE ADJUSTED
AFTER FIELD WEIGHING OPERATION

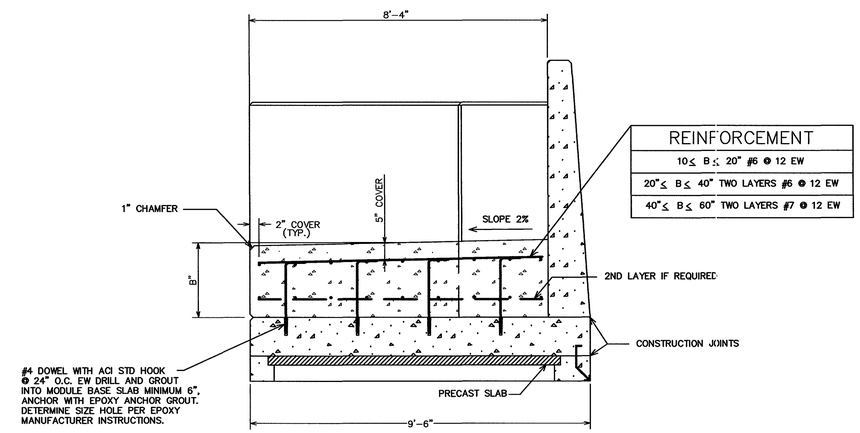

REINFORCEMENT
10" ≤ B ≤ 20" #6 @ 12 EW
20" ≤ B ≤ 40" TWO LAYERS #6 @ 12 EW
40" ≤ B ≤ 60" TWO LAYERS #7 @ 12 EW

SECTION F
SCALE: 1/2"=1'-0"

NOTES ON BALLAST:

1. BALLAST MUST BE PLACED IN SEPARATE OPERATION AFTER COMPLETION OF INITIAL JACKING PROCEDURE AND WEIGHT DETERMINATION.
2. "B" DIMENSION GIVEN IS PRELIMINARY AND MUST BE CONFIRMED BY HYDROPLUS PRIOR TO PLACEMENT, FROM WEIGHT DETERMINED IN JACKING PROCEDURE.
3. CONTRACTOR IS RESPONSIBLE FOR PROVIDING CALIBRATED JACKS, PRESSURE GAUGES AND HYDRAULIC PIPING AS REQUIRED TO ACCOMPLISH JACKING PROCEDURE.
4. FOLLOWING PLACEMENT OF BALLAST CONCRETE, JACK EACH MODULE AGAIN AND CHECK WEIGHT

THE STATE OF NEW HAMPSHIRE
STEPHEN T RUELL
No 4105
REGISTERED PROFESSIONAL ENGINEER

GRAPHIC SCALE
2' 1' 0 2'
SCALE=1/2"=1'-0"

US Army Corps of Engineers
New England District

Symbol	Description	Date	Appr.	Symbol	Description	Date	Appr.

Date: 2-08-05
Rev.
Solicitation no. W912WJ-05-B-0005
Drawing code: CON-414
File name: 080320A.SF4
Plot date: 23-02-2005
Plot scale: 1:1/2 / M

Designed by: KAM
Drawn by: PK/PJ
Reviewed by: STR
Submitted by: Hasan Kocahan, Project Manager Hydroplus Inc.

U.S. ARMY ENGINEER DISTRICT
CORPS OF ENGINEERS
CONCORD, MASSACHUSETTS

HYDROPLUS INC.
FALLS CHURCH, VA.
hydroplusUSA@aol.com

WATER RESOURCES DEVELOPMENT PROJECT
OTTER BROOK LAKE
KEENE, NEW HAMPSHIRE
MODIFY SPILLWAY

FUSEGATE MODULE BALLAST
PLAN AND ELEVATION

Reference number:
SF-4
Sheet 4 of 10

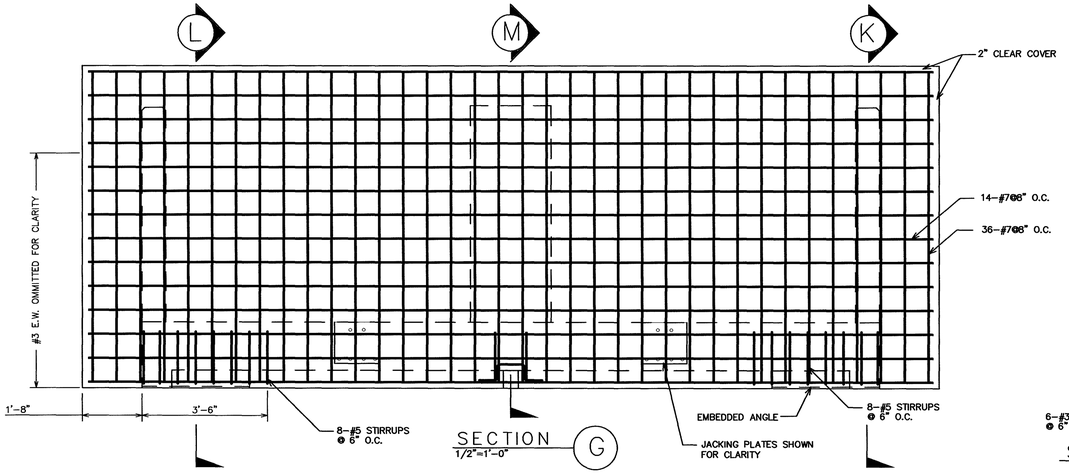

SECTION 1/2"=1'-0" (G)

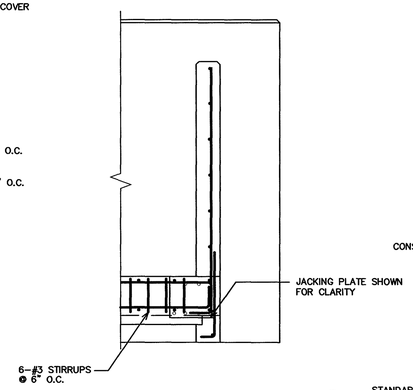

STIFFENER WALL SECTION 1/2"=1'-0" (J)

NOTE:

LOCATE JACKING PLATES BEFORE REBAR PLACEMENT

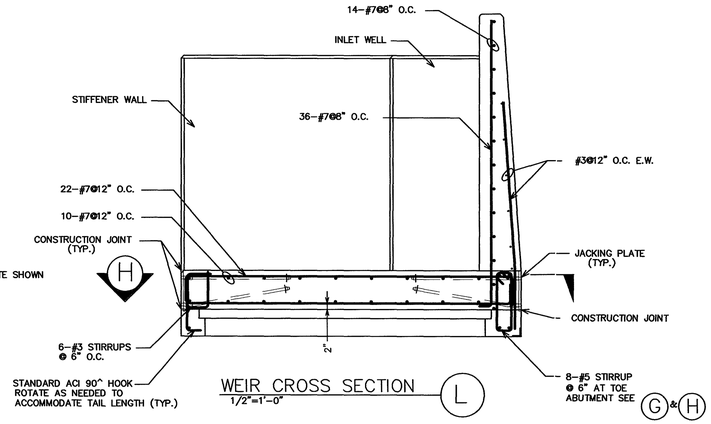

WEIR CROSS SECTION 1/2"=1'-0" (L)

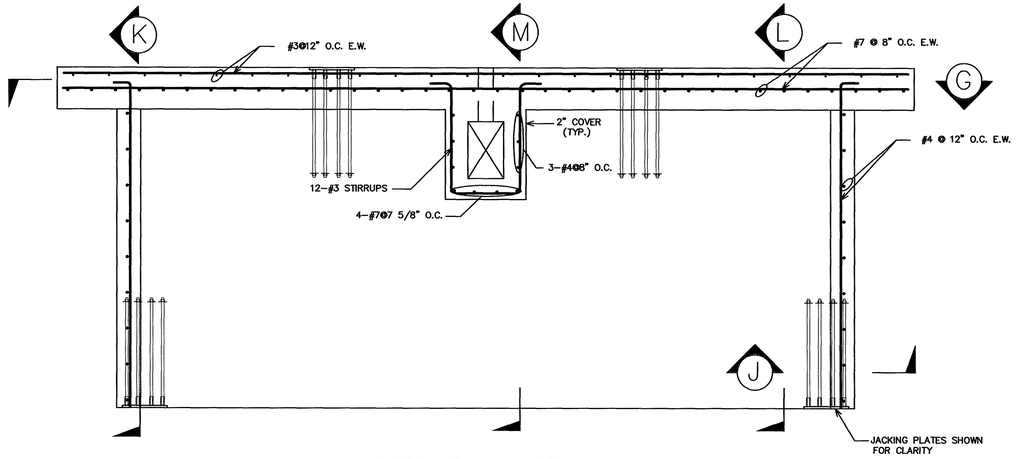

FUSEGATE PLAN VIEW 1/2"=1'-0"

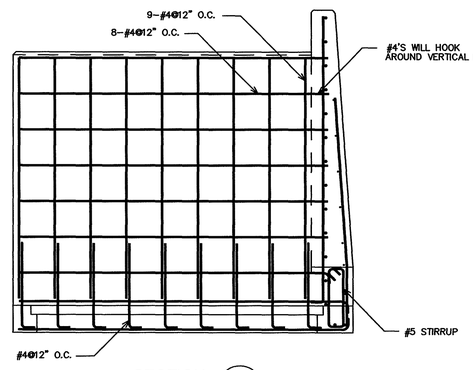

SECTION 1/2"=1'-0" (K)

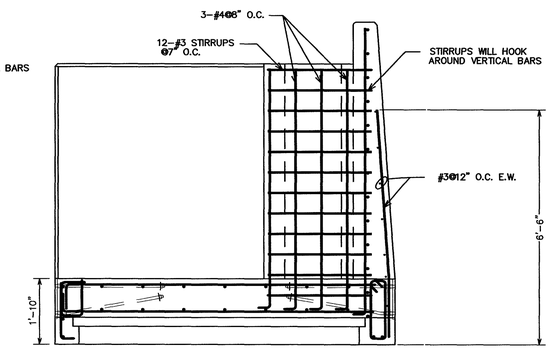

INLET WELL CROSS SECTION 1/2"=1'-0" (M)

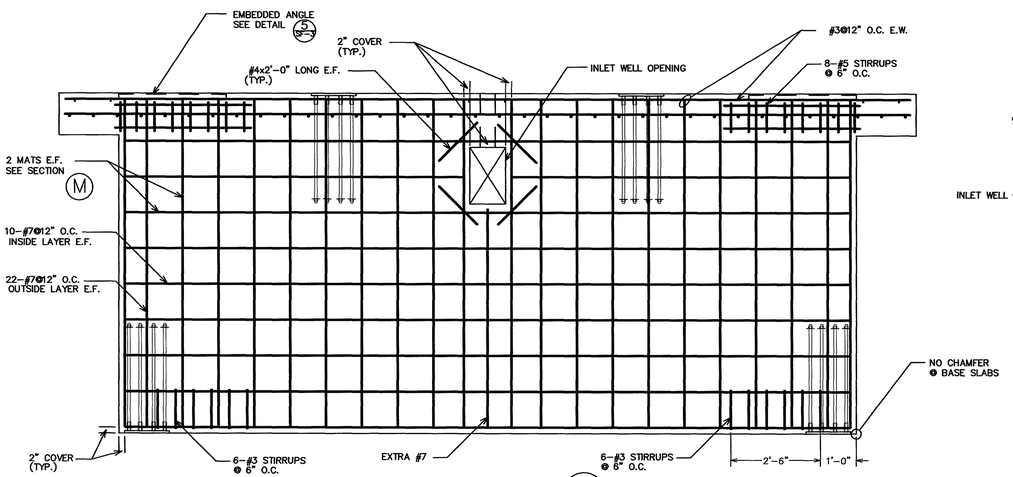

BASE SLAB SECTION 1/2"=1'-0" (H)

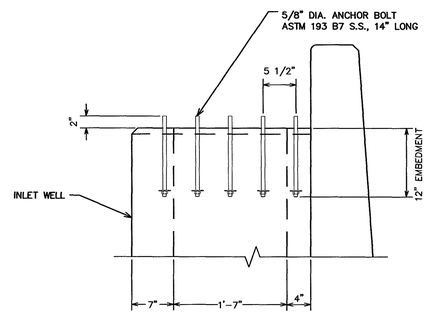

ELEVATION

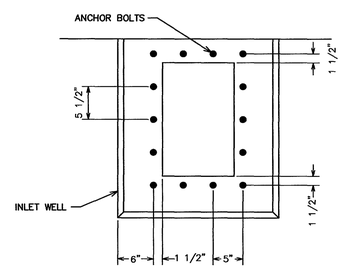

PLAN

INLET WELL ANCHOR BOLT LOCATION DETAILS 1"=1'-0"

NOTE:

FOR STEEL INLET WELL DIMENSIONS SEE (SF-7)

GRAPHIC SCALE

1 0 1 SCALE=1"=1'-0"

2' 1' 0 2' SCALE=1/2"=1'-0"

THE STATE OF NEW HAMPSHIRE STEPHEN T. RUELL No. 4105 REGISTERED PROFESSIONAL ENGINEER

US Army Corps of Engineers
New England District

Symbol	Description	Date	Appr.	Symbol	Description	Date	Appr.

Designed by: KAM
Drawn by: PJ
Reviewed by: STR
Submitted by: Hasan Kocaban, Project Manager, Hydroplus Inc
Date: 2-08-05
Contract no. W912KJ-05-B-0005
Drawing code: CON-414
File name: 08050503.S5
Plot date: 23-02-2005
Plot scale: 1:1/2" / IN
Rev

U.S. ARMY ENGINEER DISTRICT
CORPS OF ENGINEERS
CONCORD, MASSACHUSETTS

HYDROPLUS INC.
FALLS CHURCH, VA.
hydroplusUSA@aol.com

WATER RESOURCES DEVELOPMENT PROJECT
OTTER BROOK LAKE
KEENE, NEW HAMPSHIRE
MODIFY SPILLWAY

FUSEGATE REINFORCEMENT DETAIL

Reference number: SF-5

Sheet 5 of 10

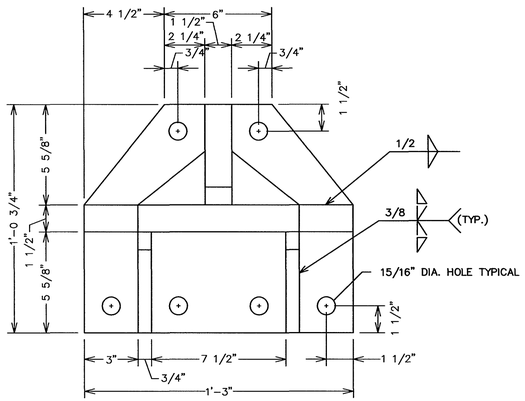

FRONT VIEW– JACKING SHOE
SCALE: 3"=1–0"

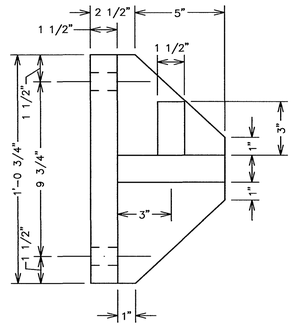

SIDE VIEW
SCALE: 3"=1–0"

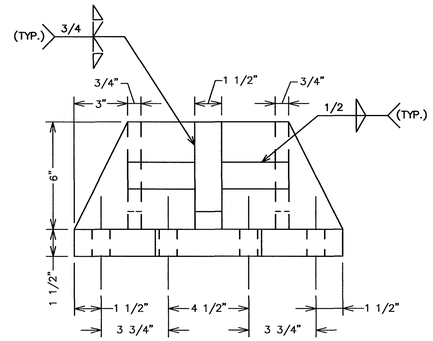

TOP VIEW
SCALE: 3"=1–0"

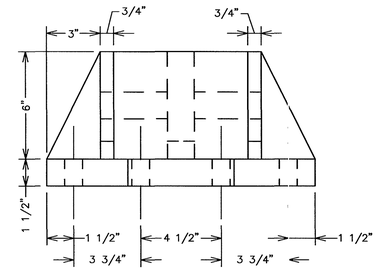

BOTTOM VIEW
SCALE: 3"=1–0"

NOTES:

1. PROVIDE 8 JACKING SHOE ASSEMBLIES AS SHOWN.
2. JACKING SHOES – STEEL ASTM A572 GR.50 PAINTED (SEE SPECIFICATION)
3. JACKING SHOES AND ATTACHMENT BOLTS SHALL BE PLACED IN OWNERS DESIGNATED STORAGE LOCATION WHEN PROJECT IS COMPLETED
4. PROVIDE 60 – 7/8" DIA. A490X BOLTS.
5. CONTRACTOR SHALL FURNISH JACK WITH SUFFICIENT HEIGHT AND WIDTH CLEARANCE TO FIT WITHIN THE JACKING SHOE AND ALLOW BEARING PLATES TO BE PLACED ON CONCRETE.
6. JACK SHALL BE PLACED AS CLOSE TO THE FUSEGATE AS POSSIBLE.
7. PLACE BEARING PLATE ABOVE JACK RAM IF CLEARANCE ALLOWS.

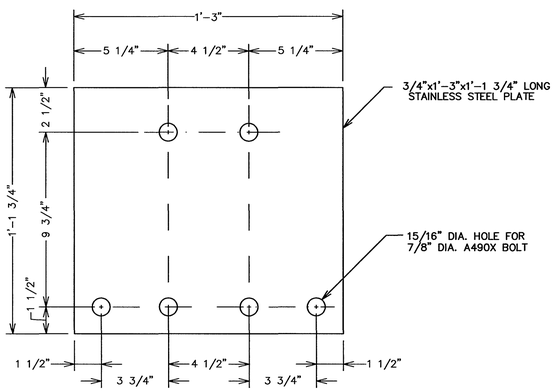

FRONT VIEW – ANCHOR BOLT ASSEMBLY
SCALE: 3"=1–0"

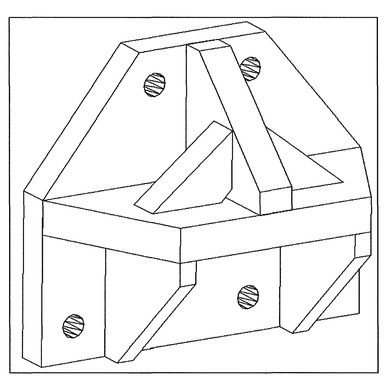

ISOMETRIC VIEW

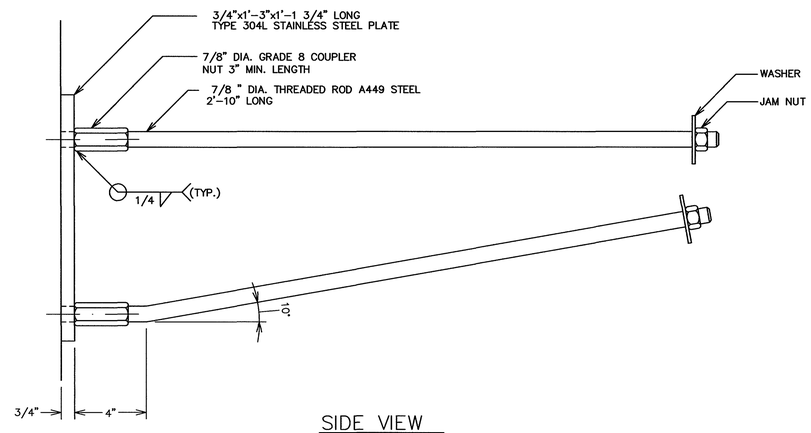

SIDE VIEW
SCALE: 3"=1–0"

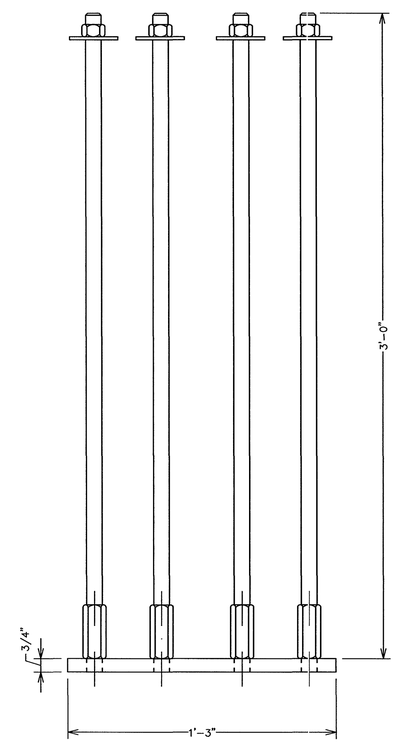

TOP VIEW
SCALE: 3"=1–0"

GRAPHIC SCALE
3 0 3
SCALE=3"=1'-0"

US Army Corps of Engineers
New England District

Symbol	Description	Date	Appr.	Symbol	Description	Date	Appr.

Designed by: KAM
Drawn by: PK/PJ
Reviewed by: STR
Submitted by: Hasan Kocaltan, Project Manager, Hydroplus Inc.
Date: 2-08-05
Solicitation no. W912WJ-05-B-0005
Drawing code: CON-414
File name: 080506.SF6
Plot date: 23-02-2005
Plot scale: 1:15 / IN
Rev.

U.S. ARMY ENGINEER DISTRICT
CORPS OF ENGINEERS
CONCORD, MASSACHUSETTS

HYDROPLUS INC.
FALLS CHURCH, VA.
hydroplusUSA@aol.com

WATER RESOURCES DEVELOPMENT PROJECT
OTTER BROOK LAKE
KEENE, NEW HAMPSHIRE
MODIFY SPILLWAY

FUSEGATE JACKING SHOES

Reference number:
SF-6

Sheet 6 of 10

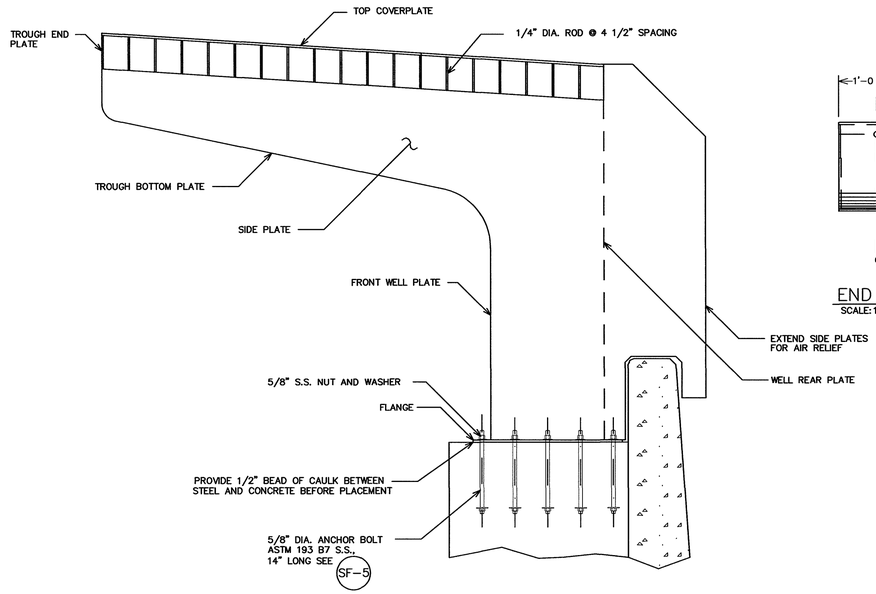

SETTING OF INLET WELL ON FUSEGATE
SCALE: 1"=1'-0"

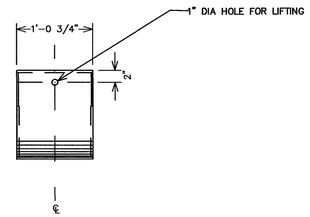

END VIEW
SCALE: 1"=1'-0"

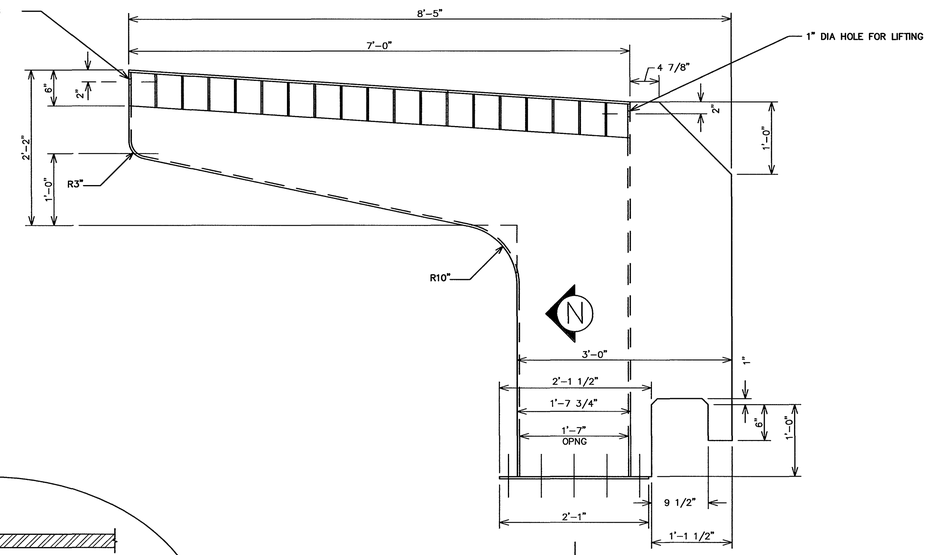

SIDE VIEW
SCALE: 1"=1'-0"

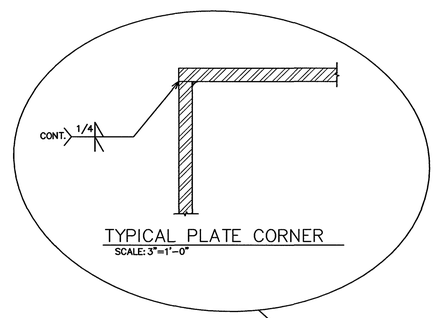

TYPICAL PLATE CORNER
SCALE: 3"=1'-0"

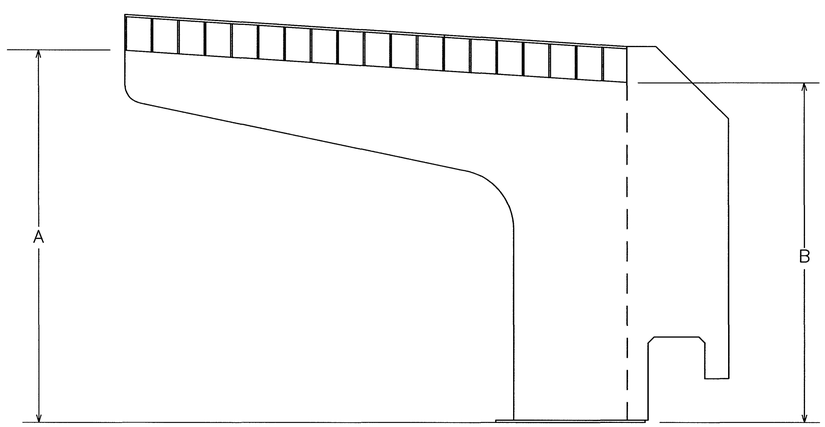

INLET WELLS LEVELING
SCALE: 1"=1'-0"

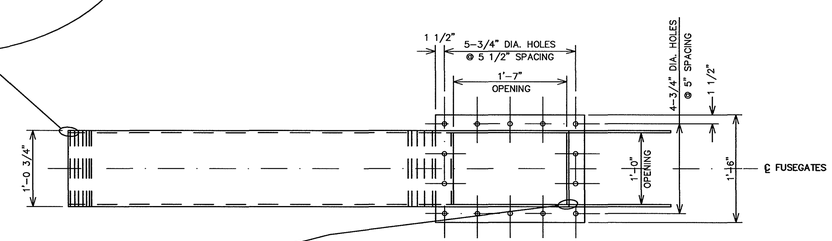

TOP VIEW
SCALE: 1"=1'-0"

NOTE:
- ALL COMPONENTS IN STAINLESS STEEL TYPE 304L.
- EXCEPT OTHERWISE SPECIFIED, ALL PLATES ARE 3/8" THICK.

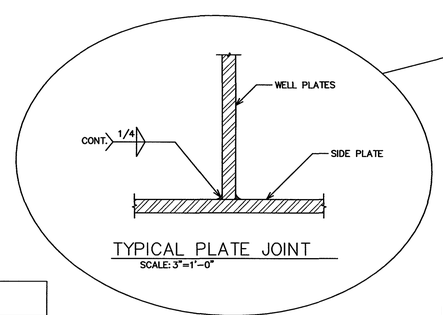

TYPICAL PLATE JOINT
SCALE: 3"=1'-0"

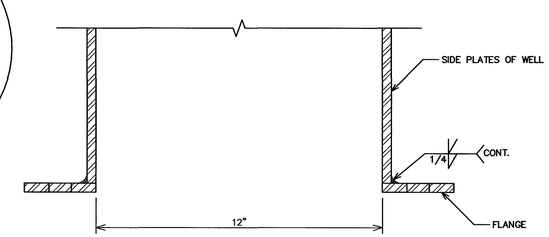

SECTION N
SCALE: 3"=1'-0"

INLET WELL HEIGHT DIMENSIONS						
FUSEGATE	1	2	3	4	5	6
A	6'-7 1/16"	7'-2 3/4"	7'-9 5/8"	8'-3 3/8"	8'-8 5/8"	5'-3 3/8"
ELEVATION	787.59'	787.23'	787.80'	788.28'	788.72'	785.28'
B	5'-11 7/8"	6'-7 15/16"	7'-2 7/8"	7'-8 7/8"	8'-2 3/16"	4'-10 7/16"
ELEVATION	786.00'	786.66'	787.24'	787.74'	788.18'	784.87'

STATE OF NEW HAMPSHIRE
STEPHEN T. RUELL No. 4105
PROFESSIONAL ENGINEER

GRAPHIC SCALE
1 0 1
SCALE=1"=1'-0"
3 0 3
SCALE=3"=1'-0"

US Army Corps of Engineers
New England District

Symbol	Description	Date	Appr	Symbol	Description	Date	Appr

Date: 2-08-05
Rev.
Solicitation no. W912WJ-05-B-0005
Drawing code: CON-414
File name: 080507.377
Plot date: 23-02-2005
Plot scale: 1:1 / A
Designed by KAM
Drawn by PK/PJ
Reviewed by STR
Submitted by: Hasan Kocohan, Project Manager Hydroplus Inc.

U.S. ARMY ENGINEER DISTRICT
CORPS OF ENGINEERS
CONCORD, MASSACHUSETTS

HYDROPLUS INC.
FALLS CHURCH, VA.
hydroplusUSA@aol.com

WATER RESOURCES DEVELOPMENT PROJECT
OTTER BROOK LAKE
KEENE, NEW HAMPSHIRE
MODIFY SPILLWAY

FUSEGATE INLET WELLS

Reference number:
SF-7
Sheet 7 of 10

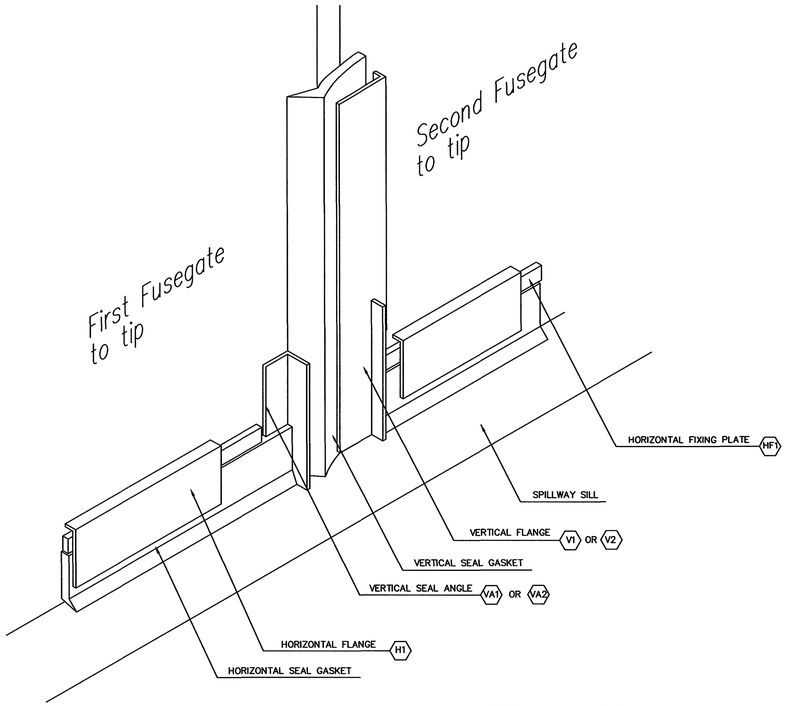

CONNECTION BETWEEN VERTICAL AND HORIZONTAL SEALS

TYPICAL DRAWING
NOT TO SCALE

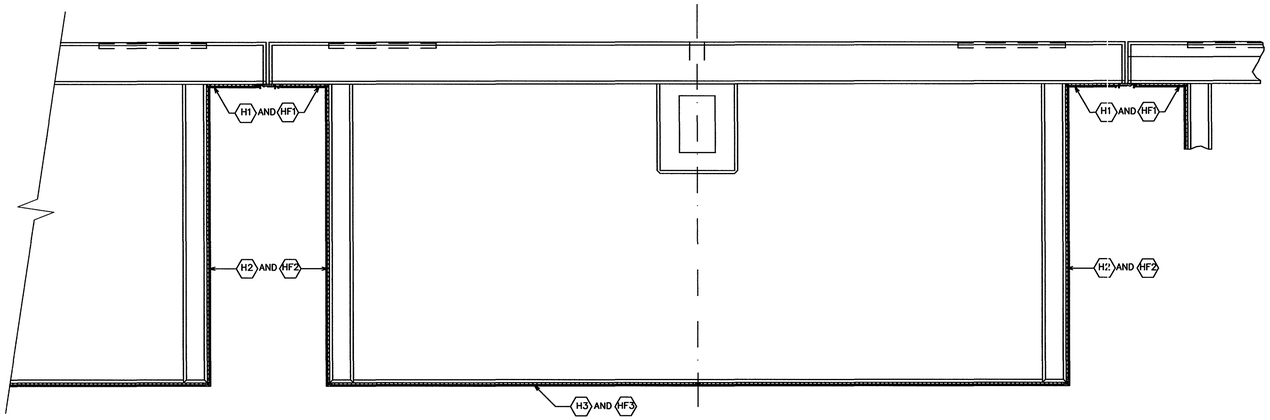

TYPICAL SEAL PLAN
1/2"=1'-0"

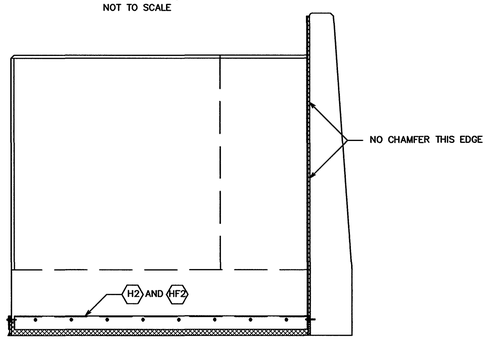

TYPICAL SEAL ELEVATION SIDE VIEW
1/2"=1'-0"

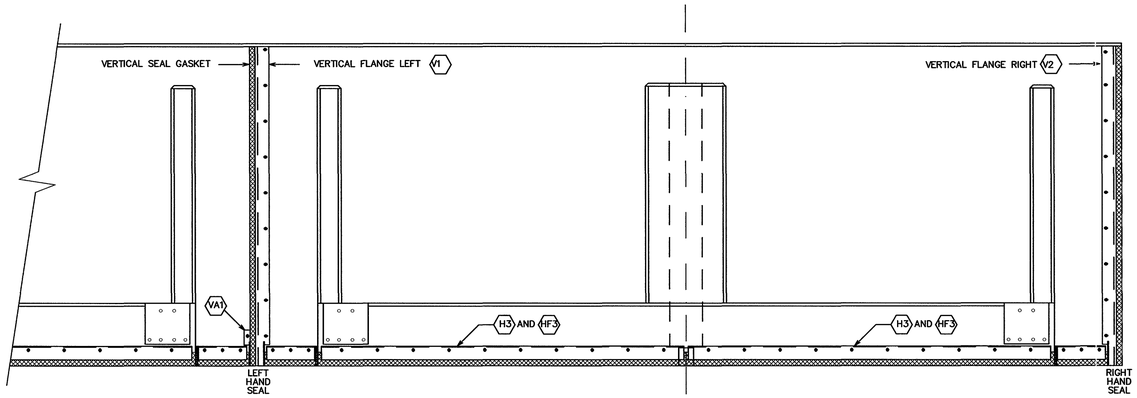

TYPICAL SEAL ELEVATION
1/2"=1'-0"

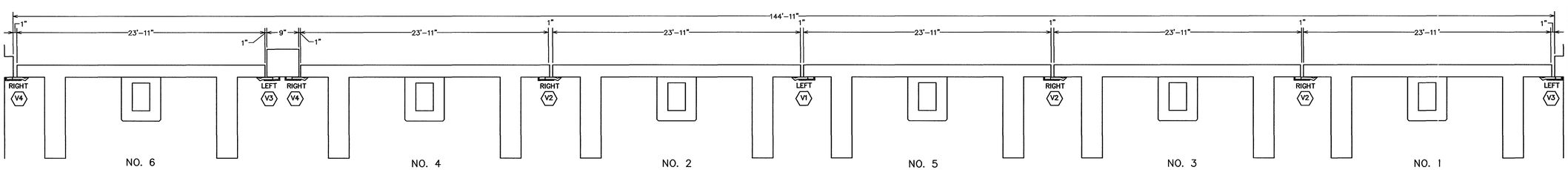

VERTICAL SEAL DIRECTION PLAN
NOT TO SCALE

1. THE FUSEGATE MODULE NUMBERS INDICATE THE ORDER OF TIPPING DURING FLOODS, IE. NO.1 IS THE FIRST, ETC.

2. PROVIDE CAREFUL ATTENTION TO SEALS ON VERTICAL JOINT BETWEEN FUSEGATES AND BETWEEN FUSEGATES AND ABUTMENTS TO ENSURE THEY ARE ORIENTED AS SHOWN.

GRAPHIC SCALE
2' 1' 0 2'
SCALE=1/2"=1'-0"

US Army Corps of Engineers
New England District

Symbol	Description	Date	Appr.	Symbol	Description	Date	Appr.

Date: 2-08-05
Rev.
Solicitation no. W912WJ-05-B-0005
Drawing code: CON-414
File name 080508.S38
Plot date 23-02-2005
Plot scale 1:1/2" / IN

Designed by: KAM
Drawn by: PK/PJ
Reviewed by: STR
Submitted by: Hasan Kocohan, Project Manager Hydroplus Inc.

U.S. ARMY ENGINEER DISTRICT
CORPS OF ENGINEERS
CONCORD, MASSACHUSETTS

HYDROPLUS INC.
FALLS CHURCH, VA.
hydroplusUSA@aol.com

THE STATE OF NEW HAMPSHIRE
STEPHEN T RUELL
No. 4105
REGISTERED PROFESSIONAL ENGINEER

WATER RESOURCES DEVELOPMENT PROJECT
OTTER BROOK LAKE
KEENE, NEW HAMPSHIRE
MODIFY SPILLWAY

FUSEGATE WATERTIGHTNESS
SEAL ARRANGEMENT

Reference number:
SF-8

Sheet 8 of 10

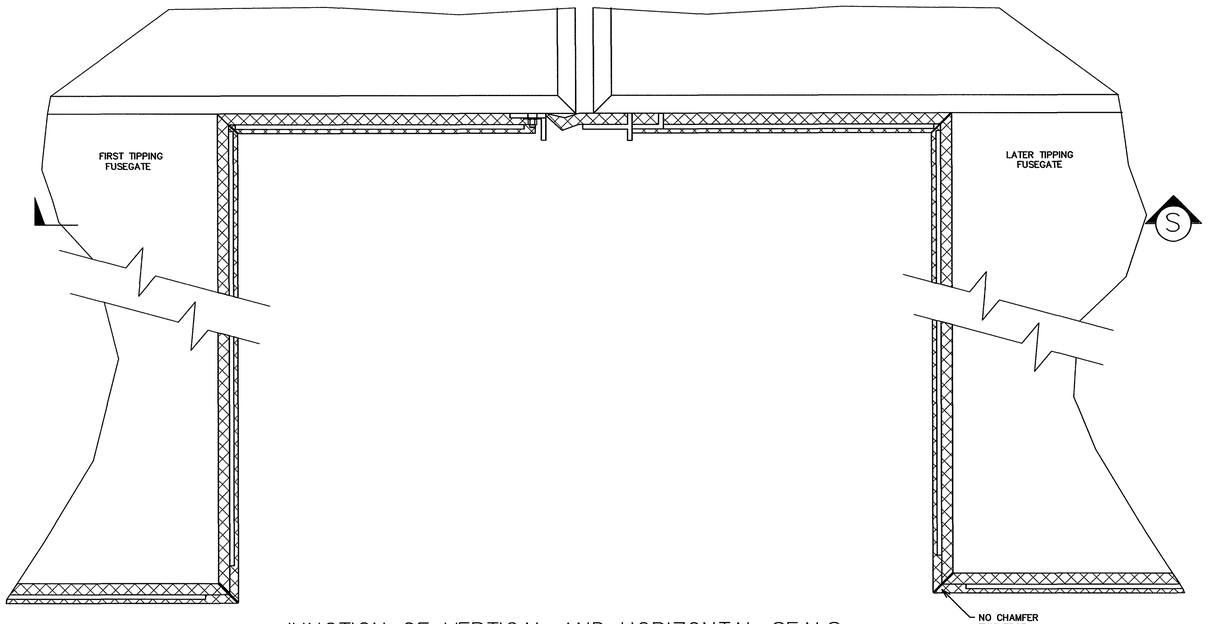

JUNCTION OF VERTICAL AND HORIZONTAL SEALS

TYPICAL SECTION

SCALE: 1/4"=1"

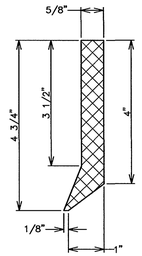

SEAL GASKET PROFILE

SCALE: 1/2"=1"

GASKET SHALL BE MOULDED FROM EPDM RUBBER

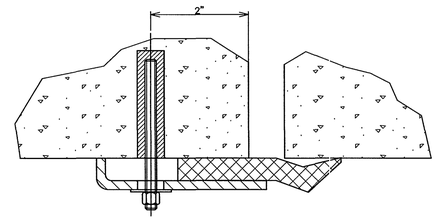

SECTION AT LEFT ABUTMENT

SCALE: 1/2"=1"

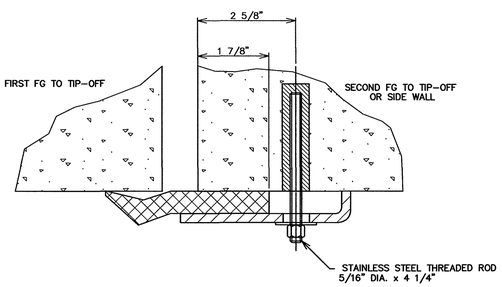

VERTICAL WATERTIGHTNESS ARRANGEMENT

SECTION P

SCALE: 1/2"=1"

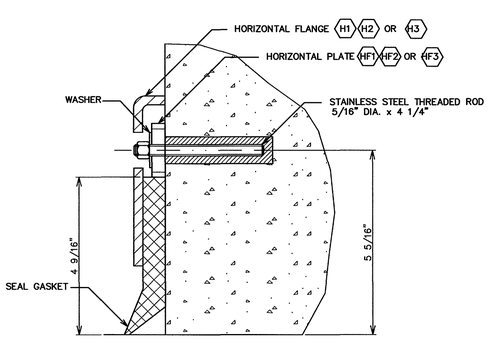

SECTION Q

SCALE: 1/2"=1"

APPLIES TO ALL 1 1/2" DIA.HOLES

SEE H1 H2 AND H3

DETAIL SHEET SF-10

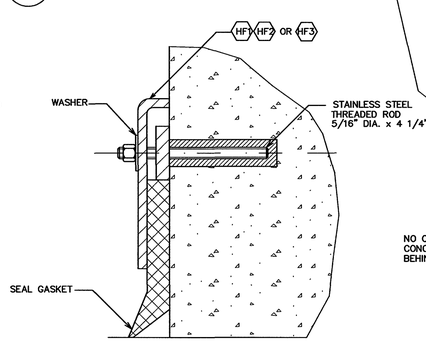

SECTION R

SCALE: 1/2"=1"

(APPLIES TO ALL BOLTS AT SLOTTED HOLES)

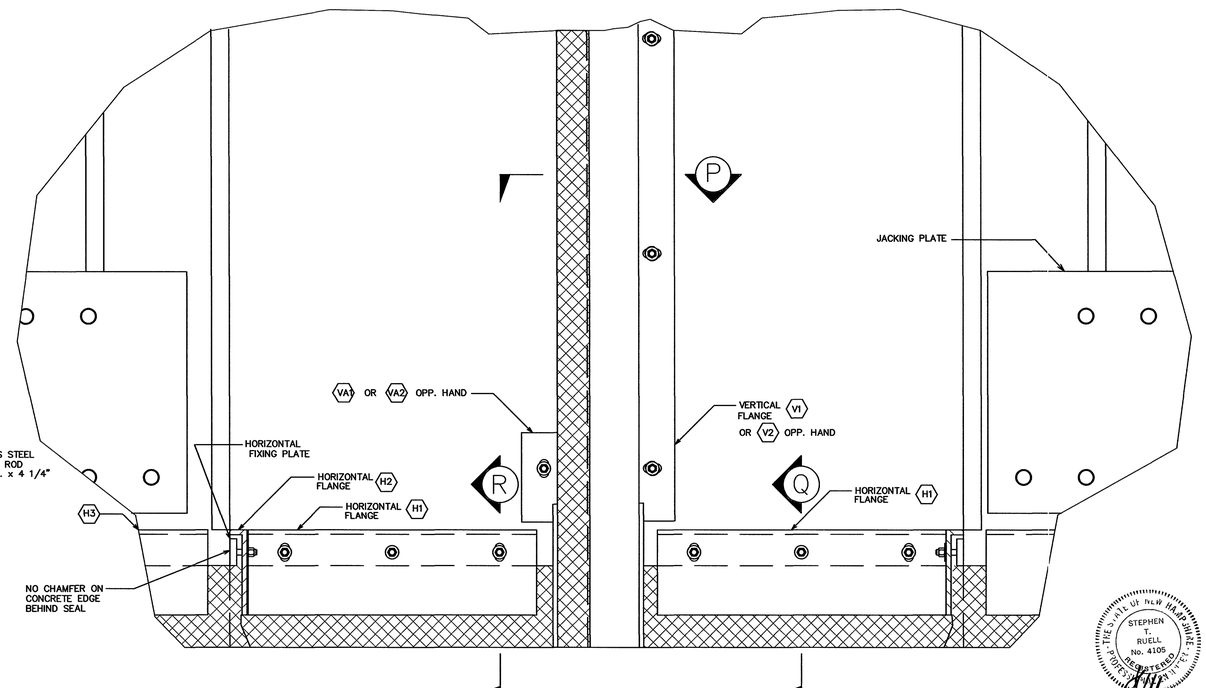

JUNCTION OF VERTICAL AND HORIZONTAL SEALS

SCALE: 1/4"=1"

S

STATE OF NEW HAMPSHIRE STEPHEN T. BUELL No. 4105 REGISTERED PROFESSIONAL ENGINEER

GRAPHIC SCALE

1 0 5

SCALE: 1/4"=1'-0"

2' 1' 0 2'

SCALE: 1/2"=1'-0"

US Army Corps of Engineers
New England District

Symbol	Description	Date	Appr.	Symbol	Description	Date	Appr.

Date: 2-08-05 | Rev.

Solicitation no. W912WJ-05-B-0005

Drawing code: CON-414

File name: 08D5X0.S9

Plot date: 23-02-2005

Plot scale: 1:1/2" / A

Designed by: KAM

Drawn by: PK/PJ

Reviewed by: STR

Submitted by: Hasan Kocaban, Project Manager Hydroplus Inc.

U.S. ARMY ENGINEER DISTRICT CORPS OF ENGINEERS CONCORD, MASSACHUSETTS

HYDROPLUS INC. FALLS CHURCH, VA. hydroplusUSA@aol.com

WATER RESOURCES DEVELOPMENT PROJECT
OTTER BROOK LAKE
KEENE, NEW HAMPSHIRE
MODIFY SPILLWAY

FUSEGATE WATERTIGHTNESS SEAL DETAILS I

Reference number:

SF-9

Sheet 9 of 10

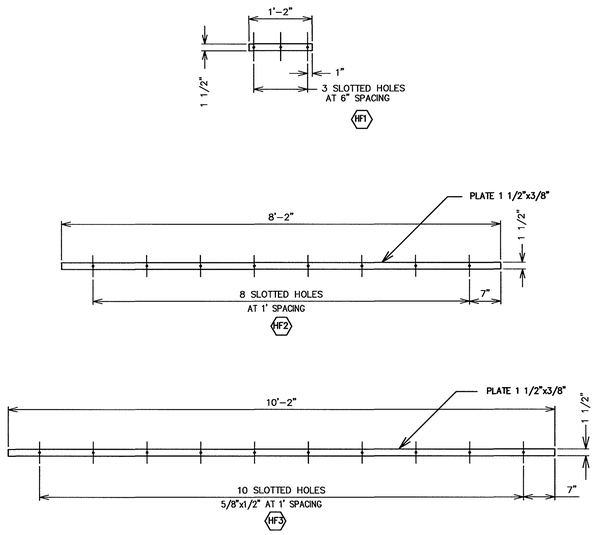

HORIZONTAL PLATE

SCALE: 3/4"=1'-0"

NOTES:
1. SLOTTED HOLES FOR SEAL PLATES ARE 5/8"x1/2".

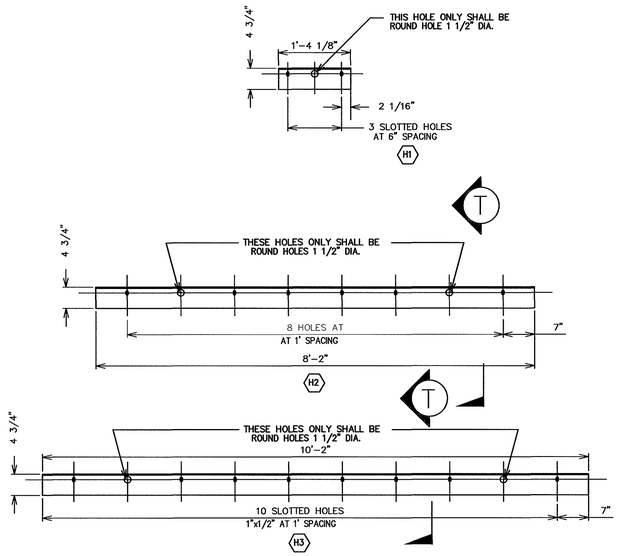

HORIZONTAL FLANGE

SCALE: 3/4"=1'-0"

GENERAL NOTES:
1. EXCEPT WHERE OTHERWISE NOTED, HOLES ARE SLOTTED 1"x1/2".
2. MATERIAL FOR ALL PIECES SHALL BE ASTM A276 TYPE 304L STAINLESS STEEL

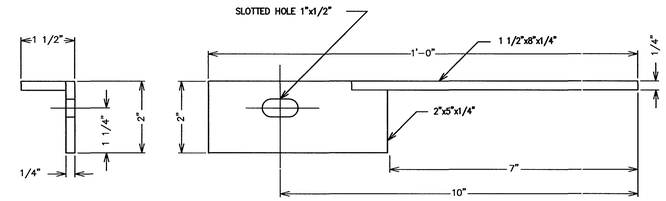

VERTICAL SEAL ANGLE

SCALE: 1/2"=1"

LEFT HAND VA1 AS SHOWN

RIGHT HAND VA2 OPPOSITE HAND

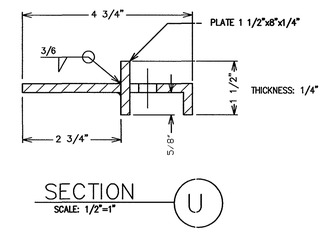

SECTION U

SCALE: 1/2"=1"

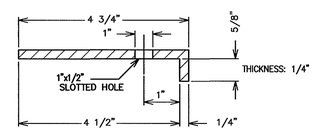

SECTION T

SCALE: 1/2"=1"

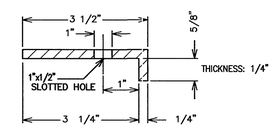

SECTION V

SCALE: 1/2"=1"

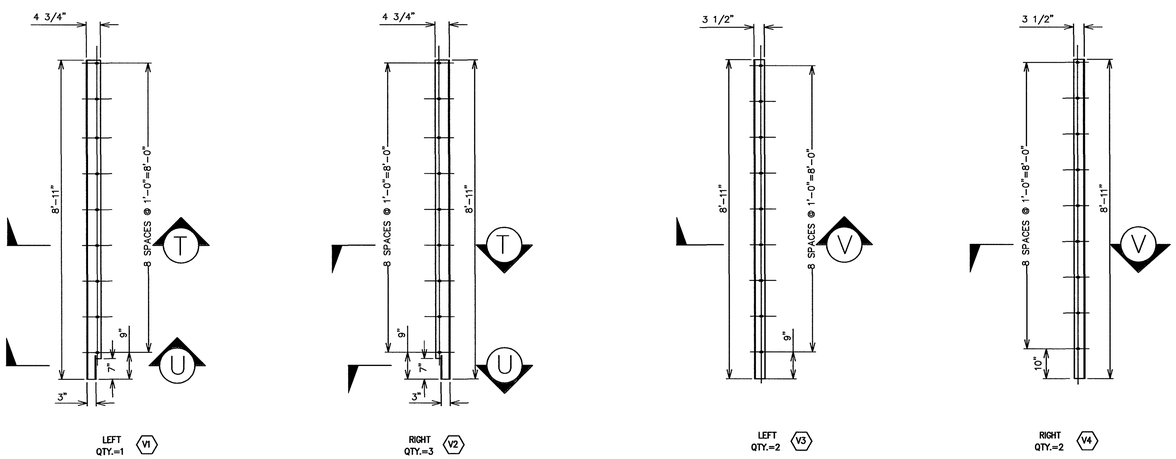

VERTICAL FLANGE

SCALE: 1/2"=1'-0"

GRAPHIC SCALE
2' 1' 0 2'
SCALE=1/2"=1'-0"

1 0 1
SCALE=3/4"=1'-0"

FUSEGATE SEAL BILL OF MATERIALS

PART NUMBER	PART NAME	LEFT ABUTMENT	FUSEGATE 6	PIER	FUSEGATE 4	FUSEGATE 2	FUSEGATE 5	FUSEGATE 3	FUSEGATE 1	RIGHT ABUTMENT	TOTAL
H1	HORIZONTAL FLANGE		2		2	2	2	2	2		12
H2	HORIZONTAL FLANGE		2		2	2	2	2	2		12
H3	HORIZONTAL FLANGE		2		2	2	2	2	2		12
HF1	HORIZONTAL FIXING PLATE		2		2	2	2	2	2		12
HF2	HORIZONTAL FIXING PLATE		2		2	2	2	2	2		12
HF3	HORIZONTAL FIXING PLATE		2		2	2	2	2	2		12
V1	VERTICAL FLANGE LEFT						1				1
V2	VERTICAL FLANGE RIGHT				1		1	1			3
V3	VERTICAL FLANGE LEFT ABUTMENT			1						1	2
V4	VERTICAL FLANGE RIGHT ABUTMENT	1		1							2
VA1	VERTICAL SEAL ANGLE LEFT		1			1			1		3
VA2	VERTICAL SEAL ANGLE RIGHT		1		1	1		1	1		5
	4 1/4" LONG STAINLESS STEEL THREADED ROD (5/16" DIA.)	9	44	18	52	44	60	52	44	9	332
	LARGE WASHER	9	44	18	52	44	60	52	44	9	332
	NUT (5/16" DIA.)	9	44	18	52	44	60	52	44	9	332
	SEAL GASKET (FEET)	9	42	18	51	42	60	51	42	9	324 FT.

US Army Corps of Engineers
New England District

Symbol	Description	Date	Appr.	Symbol	Description	Date	Appr.

Rev

Date: 2-08-05
Solicitation no. W912WJ-05-B-0005
Drawing code: CON-414
File name: 08050LS70
Plot date: 25-02-2005
Plot scale: 1/4" = 1'

Designed by: KAM
Drawn by: PK/PJ
Reviewed by: STR
Submitted by: Hason Kocohan, Project Manager Hydroplus Inc.

U.S. ARMY ENGINEER DISTRICT
CORPS OF ENGINEERS
CONCORD, MASSACHUSETTS

HYDROPLUS INC.
FALLS CHURCH, VA.
hydroplusUSA@aol.com

WATER RESOURCES DEVELOPMENT PROJECT
OTTER BROOK LAKE
KEENE, NEW HAMPSHIRE
MODIFY SPILLWAY

FUSEGATE WATERTIGHTNESS
SEAL DETAILS II

Reference number:
SF-10

Sheet 10 of 10

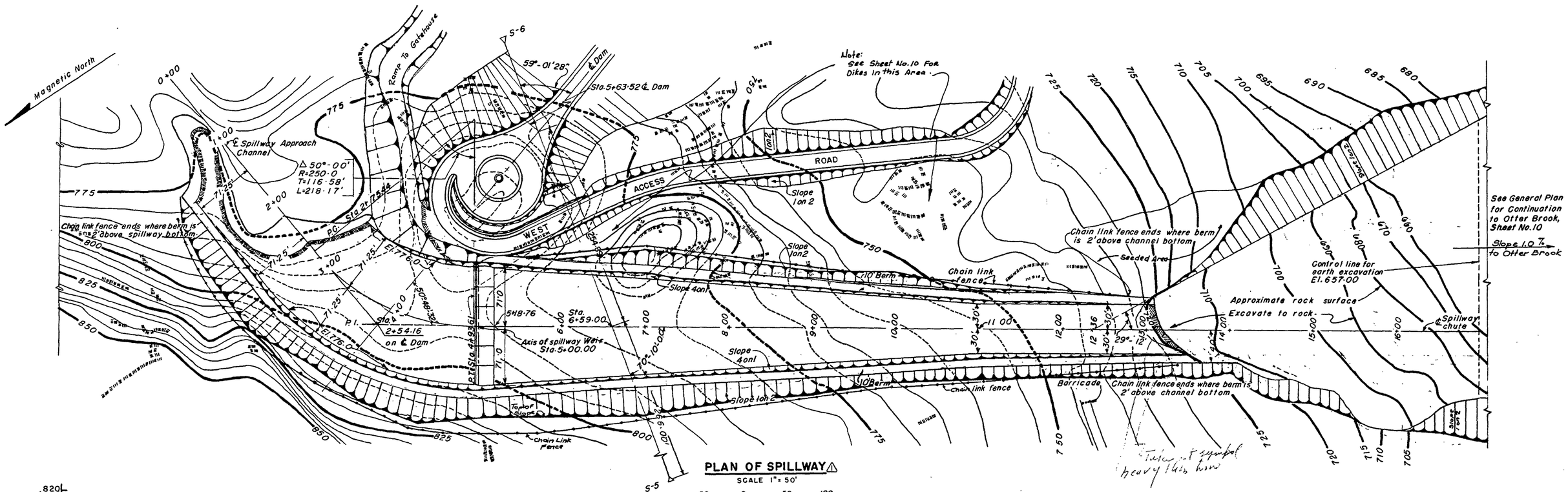

PLAN OF SPILLWAY

SCALE 1" = 50'

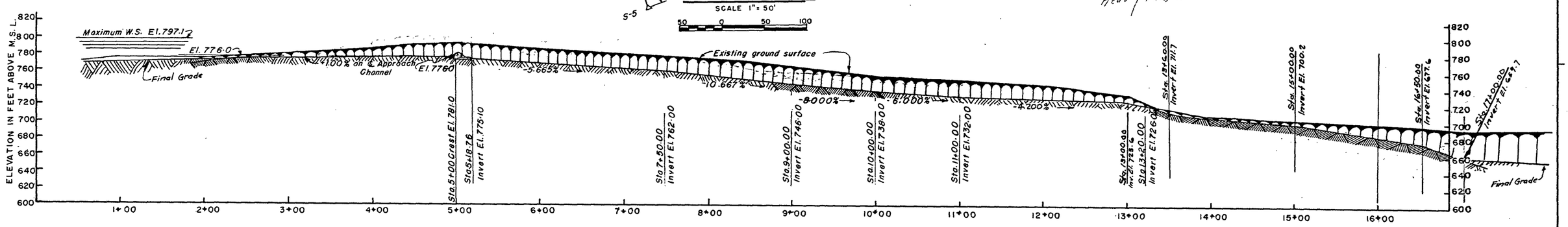

PROFILE ON ℄ SPILLWAY

SCALE 1" = 50'

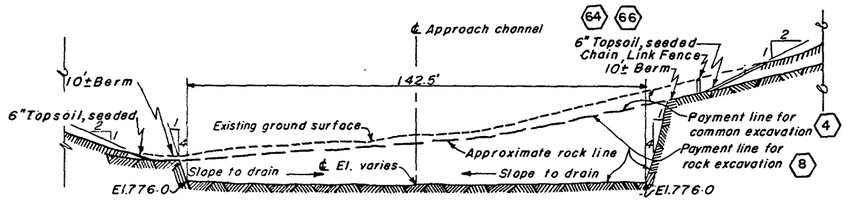

APPROACH CHANNEL–TYPICAL SECTION

SCALE 1" = 20'

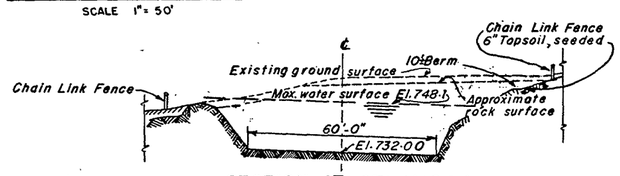

SECTION AT STA. 11+00

SCALE 1" = 20'

NOTE:
Elevations refer to Mean Sea Level Datum.
Contour interval is five feet.
Channel sections are taken looking downstream.
For plan, profile and details of West Access Road see sheet No. 56
For weir and details, fence, borricade and wall details see sheet No. 13
Rock elevations are approximate and subject to field check.
Figures in hexagons are item numbers under which payments will be made
Mod. #13 Except for topsoil & seeding, the concrete wall with associated items of work on the left side of the spillway was not constructed.

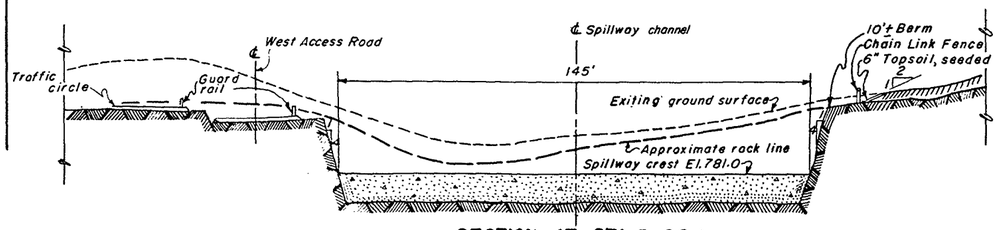

SECTION AT STA. 5+00

SCALE 1" = 20'

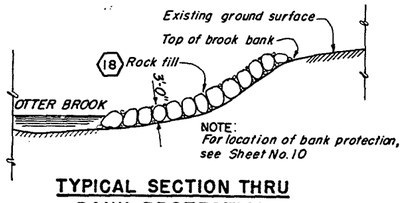

NOTE:
For location of bank protection, see Sheet No. 10

TYPICAL SECTION THRU BANK PROTECTION

SCALE 1" = 10'

REVISION	DATE	DESCRIPTION	BY
		Final Field Corrections	
1	11/14/55	Chain link fence relocated (Add. #1)	

CORPS OF ENGINEERS. U. S. ARMY
OFFICE OF THE DIVISION ENGINEER
NEW ENGLAND DIVISION
BOSTON, MASS.

DR. BY F.B.S. | TR. BY J.R. | CK. BY

PROJECT ENGINEER

SUBMITTED BY: CHIEF, PLANN. & RPTS. BRANCH

APPROVED: CHIEF, ENGINEERING DIV.

APPROVED: LT. COL. C.E., ASST. TO DIVISION ENGINEER

DATE: JUNE 1956

CONNECTICUT RIVER FLOOD CONTROL
OTTER BROOK DAM
SPILLWAY
PLAN, PROFILE & SECTIONS
OTTER BROOK NEW HAMPSHIRE

SCALE AS SHOWN | SPEC. NO. CIV-ENG-19-06-57-4

DRAWING NUMBER
CT-1-4089

SHEET 12 OF 60

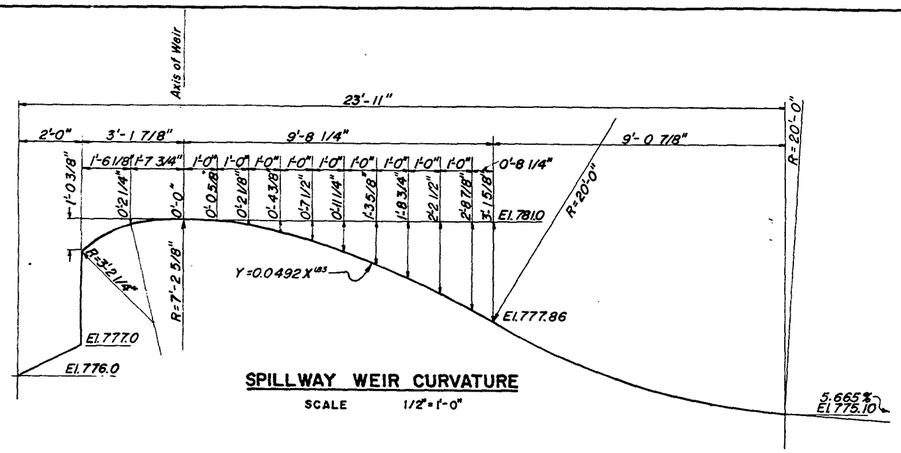

SPILLWAY WEIR CURVATURE

SCALE 1/2"=1'-0"

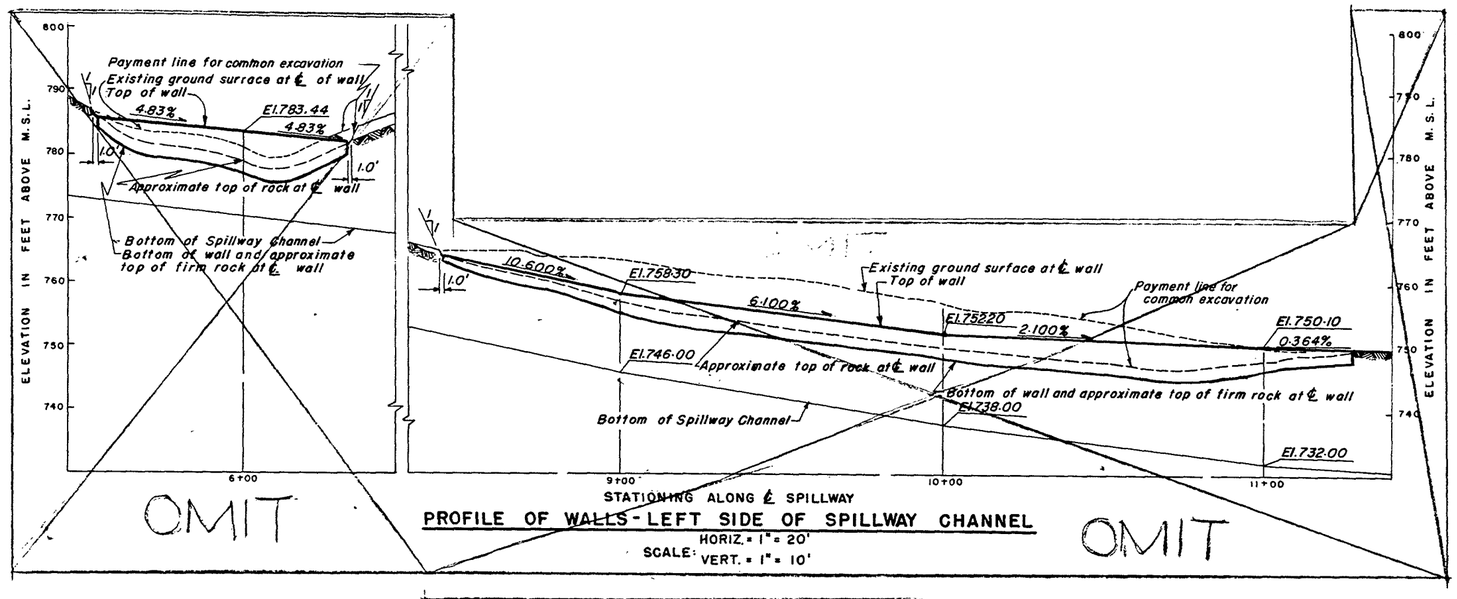

PROFILE OF WALLS - LEFT SIDE OF SPILLWAY CHANNEL

HORIZ. = 1" = 20'
SCALE: VERT. = 1" = 10'

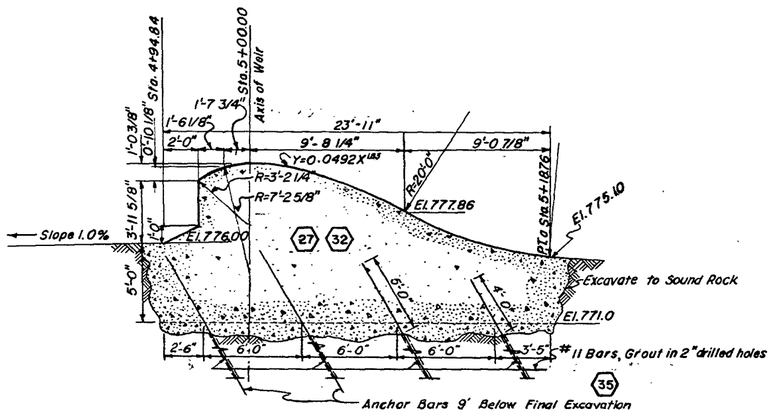

WEIR

SCALE 1/4"=1'-0"

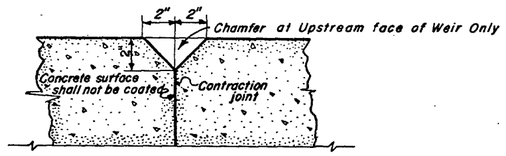

DETAIL OF CONTRACTION JOINT

SCALE 1/4"=1"

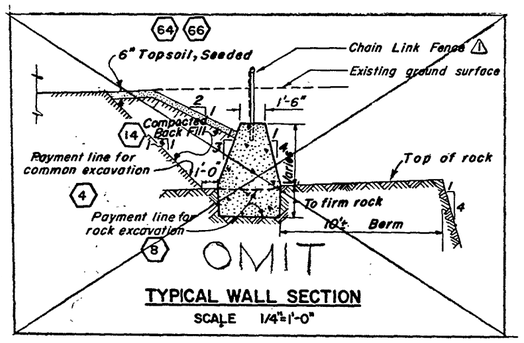

TYPICAL WALL SECTION

SCALE 1/4"=1'-0"

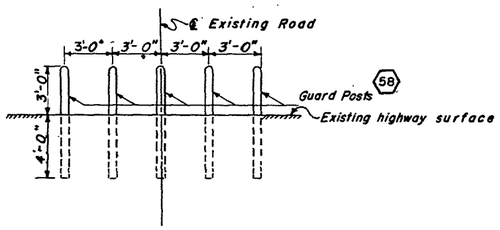

ROAD BARRICADE

SCALE 1/4"=1'-0"

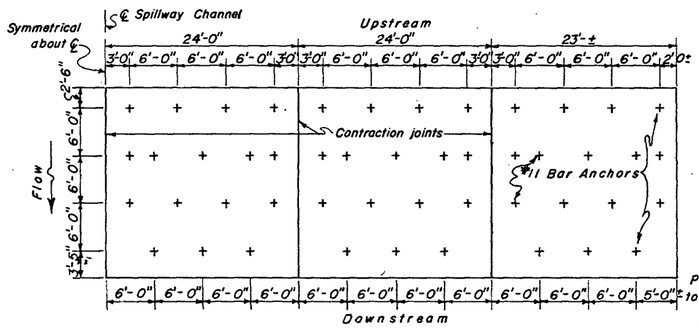

LOCATION OF CONTRACTION JOINTS & WEIR ANCHORS

SCALE 1/8"=1'-0"

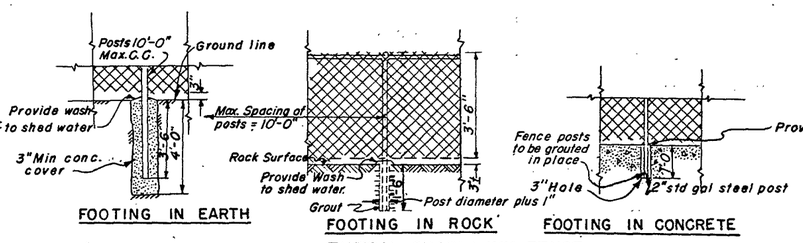

FOOTING IN EARTH FOOTING IN ROCK FOOTING IN CONCRETE

TYPICAL CHAIN LINK FENCE 59

SCALE 1/2"=1'-0"

NOTES:

Figures in hexagons indicate item numbers under which payment will be made.

Elevations refer to Mean Sea Level Datum

For plan, profile, and section of Spillway Channel see sheet No. 12

Concrete shown on this sheet will be paid for under item No. 27

For guard posts see Sheet No. 58

Except for topsoil & seeding the concrete wall with associated items of work on the left side of the spillway shall not be constructed

REVISION	DATE	DESCRIPTION	BY
		Final field corrections	
1	11/14/57	Chain link fence relocated. (Add #1)	

CORPS OF ENGINEERS, U. S. ARMY
OFFICE OF THE DIVISION ENGINEER
NEW ENGLAND DIVISION
BOSTON, MASS.

DR. BY F. B. S. | TR. BY J.R. | CK. BY H.S.F.

PROJECT ENGINEER

SUBMITTED BY: CHIEF PLANN. & RPT'S BRANCH

APPROVED: CHIEF, ENGINEERING DIV.

APPROVED: LT. COL. C.E., ASST. TO DIVISION ENGINEER

CONNECTICUT RIVER FLOOD CONTROL

OTTER BROOK DAM
SPILLWAY DETAILS

OTTER BROOK, NEW HAMPSHIRE

DATE JUNE 1956

SCALE AS SHOWN SPEC. NO. CIV-ENG-19-016-57-4

DRAWING NUMBER CT-1-4090

SHEET 13 OF 60